Cooking Equipment Wiring Diagrams

Fryers

Table of Contents

Wiring Diagram	Page
Combo Gas Valve Honeywell Wiring.pdf	2
Computer Fryer Wiring Diagram.pdf	3-4
IFSE Wiring.pdf	5

MODEL: IFS-40, IFS-50, AND IFS-75
NEXT ASSY: -

TITLE	PART NO:
ELEC. SCHEMATIC FOR STD. FRYER.	37112

REV	DESCRIPTION	INITIALS	DATE	ECO NO.
-	-	-	-	-

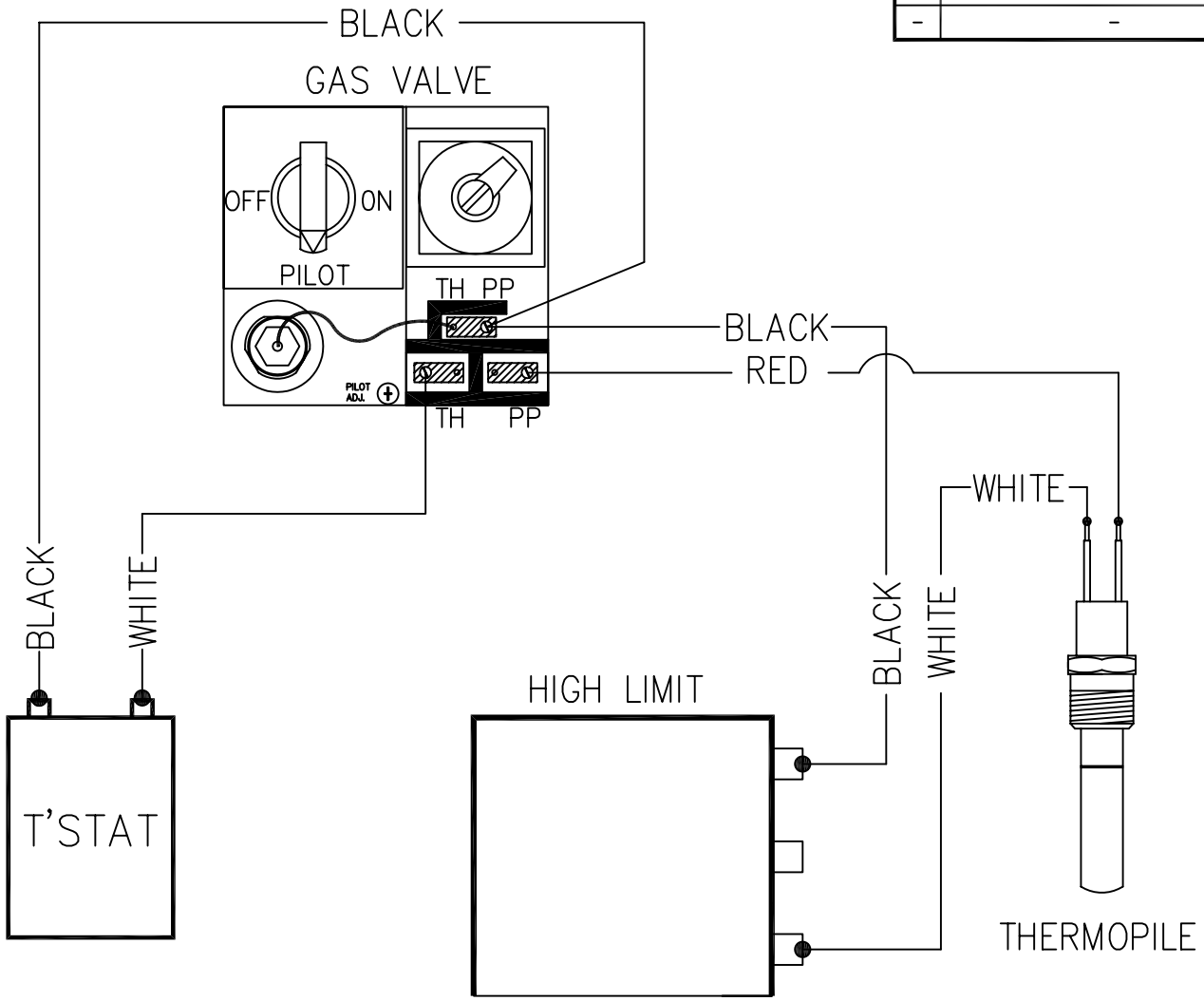

NOTE:
1. NEW VALVE.

ITEM	QTY	PART NO.	DESCRIPTION

TITLE	PART NO:	SHEET
ELEC. SCHEMATIC FOR STD. FRYER.	37112	1 of 1

DWG SCALE:	DRAWN BY:	DATE	MAT'L:	REV DATE:
1/6	JUAN O.	09/09/11	-	-

RELEASE DATE:	SHEAR SIZE:	REQ
-	-	-

TOLERANCES: UNLESS NOTED
.X ± .1
.XX ± .031
ANGLE ± .5°
FRACTION ± 1/32

IMPERIAL MANUFACTURING CO.
1128 SHERBORN ST. CORONA, CA. 92879

TITLE				PART NO:
WIRING DIAGRAM				—
REV	DESCRIPTION	INITIALS	DATE	ECO NO.
.	.	.	.	.

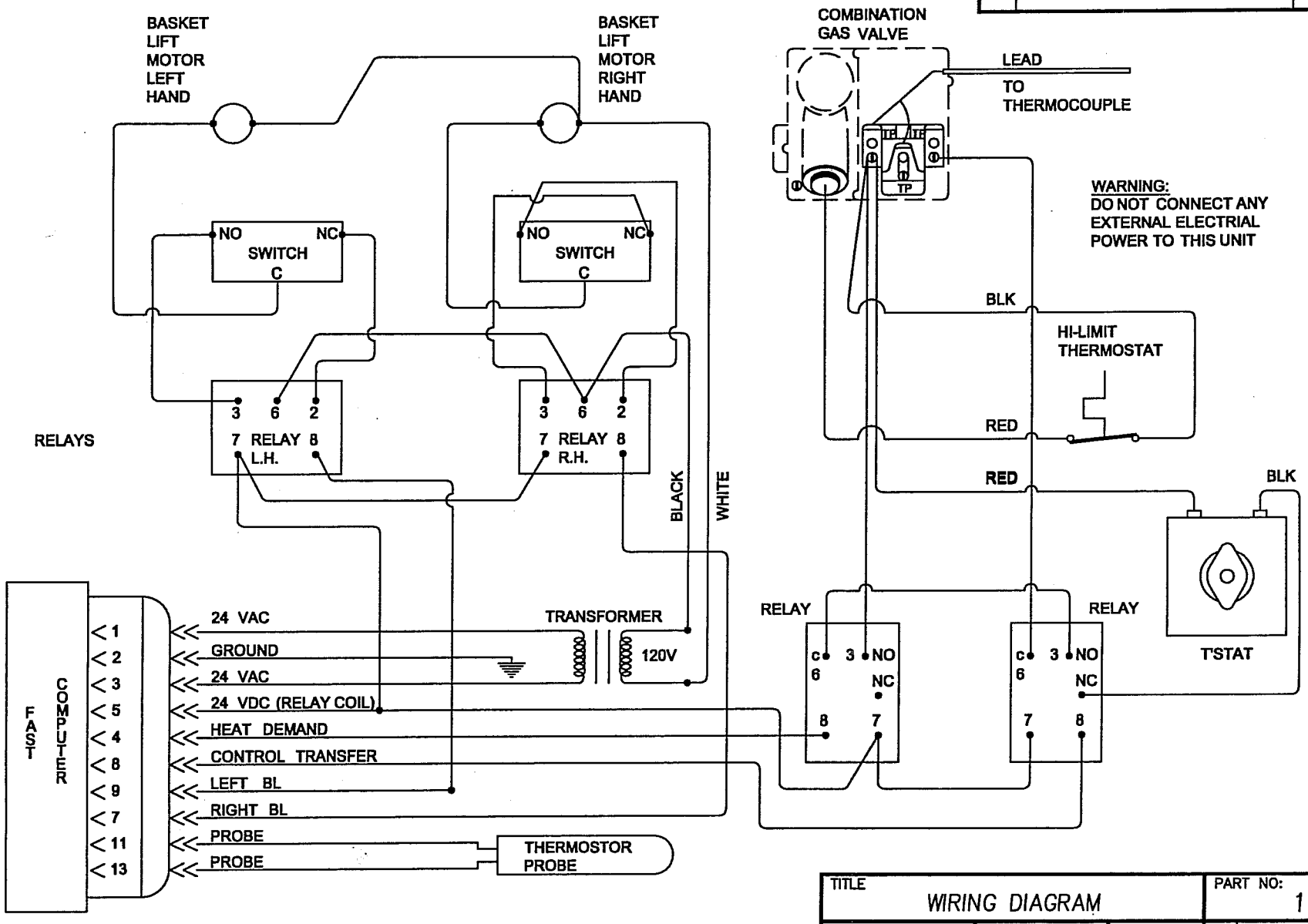

TITLE			PART NO:	SHEET
WIRING DIAGRAM			1084C	1 of 1
DWG SCALE: 1=1	DRAWN BY: J. RODRIGUEZ	DATE 6/19/97	MAT'L:	DWG SIZE: —
TOLERANCES: UNLESS NOTED	CODE NAME: —		SHEAR SIZE: —	REQ

.X ± .1
.XX ± .031
ANGLE ± .5°
FRACTION ± 1/32

IMPERIAL MANUFACTURING CO.
1560 FLOWER ST DUARTE, CA. 91010

TITLE			PART NO:
WIRING DIAGRAM			—
REV	DESCRIPTION	INITIALS	DATE	ECO NO.
.	.	.	.	.

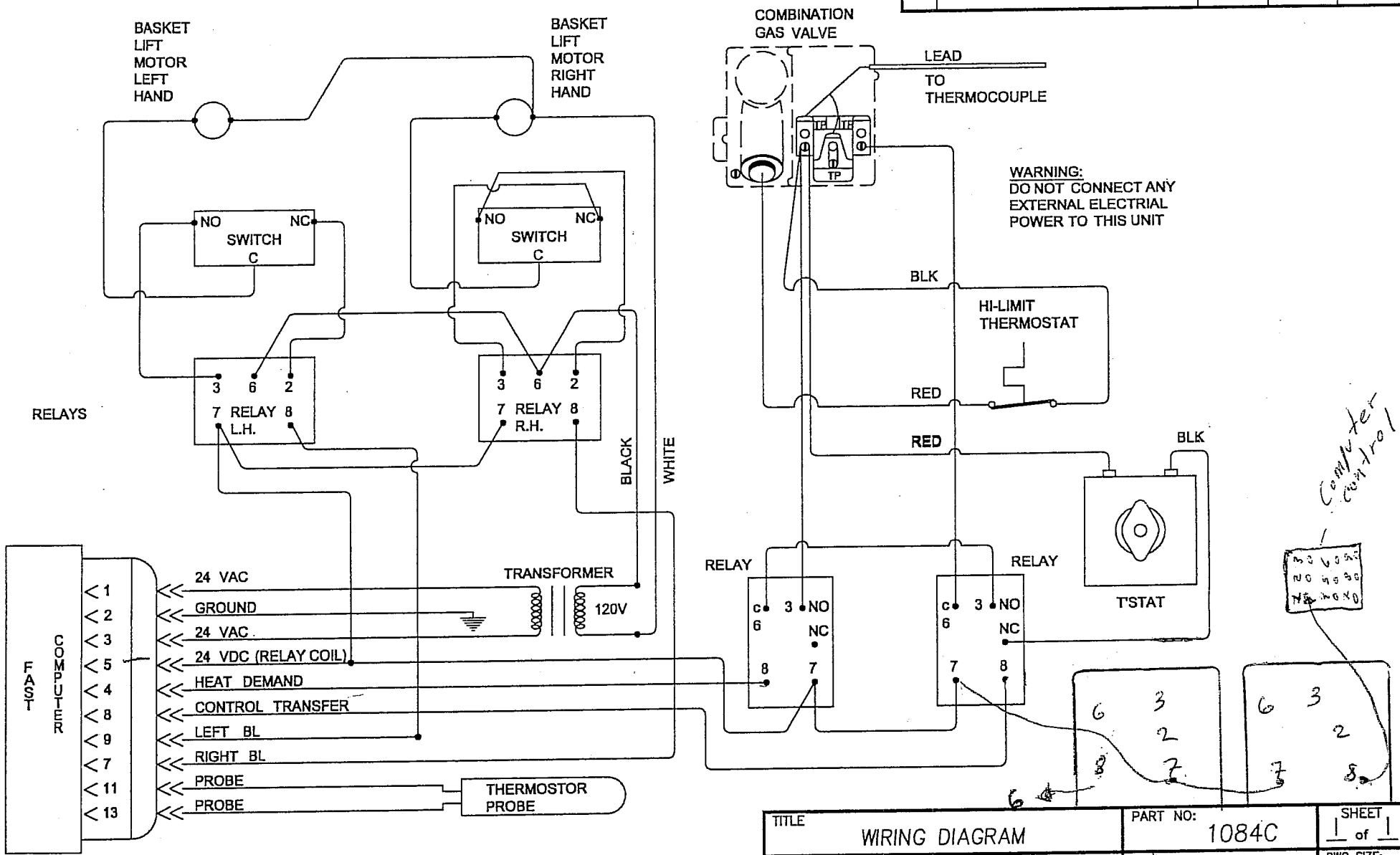

TITLE			PART NO:	SHEET
WIRING DIAGRAM			1084C	1 of 1
DWG SCALE: 1=1	DRAWN BY: J. RODRIGUEZ	DATE 6/19/97	MAT'L:	DWG SIZE: _
TOLERANCES: UNLESS NOTED	CODE NAME: _		SHEAR SIZE: _	REQ

.X ± .1
.XX ± .031
ANGLE ± .5°
FRACTION ± 1/32

IMPERIAL MANUFACTURING CO.
1560 FLOWER ST DUARTE, CA. 91010

MODEL: IFSE SERIES

TITLE	PART NO:
WIRING DIAGRAM – IFSE	36928

REV	DESCRIPTION	INITIALS	DATE	ECO NO.
–	–	–	–	–

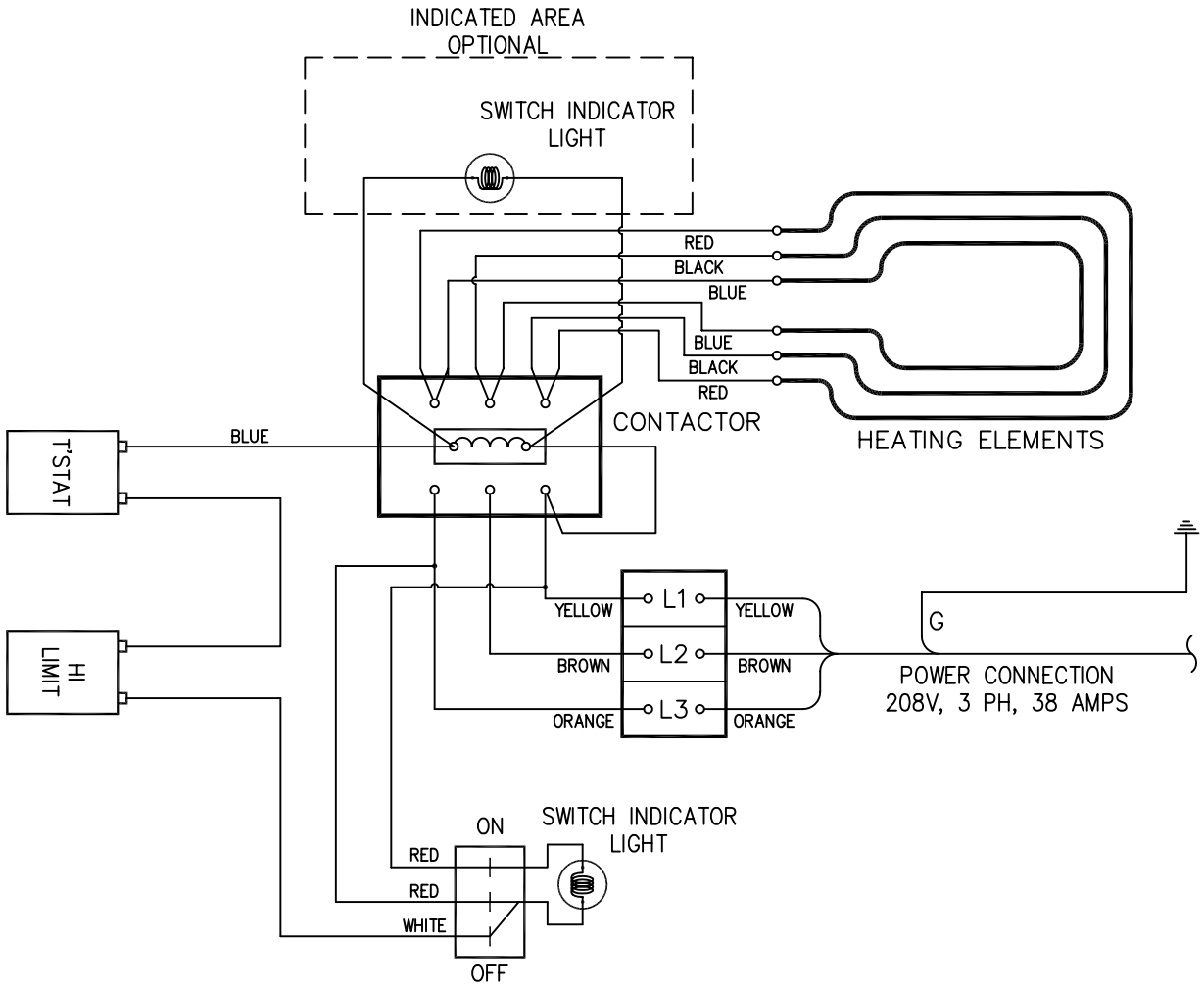

ITEM	QTY	PART NO.	DESCRIPTION

TITLE	PART NO:	SHEET
WIRING DIAGRAM – IFSE	36928	1 of 1

DWG SCALE:	DRAWN BY:	DATE	MAT'L:	DWG SIZE:
~	MLG	3/24/08	–	–
TOLERANCES: UNLESS NOTED	RELEASE DATE:		SHEAR SIZE:	REQ
	–		–	–

.X ± .1
.XX ± .031
ANGLE ± .5°
FRACTION ± 1/32

IMPERIAL MANUFACTURING CO.
1128 SHERBORN ST. CORONA, CA. 92879