INSTALLATION
AND
OPERATING INSTRUCTIONS

Outdoor Char Broilers

INTENDED FOROTHER THAN HOUSEHOLDUSE

Models: CBBQ-30S & CBBQ-60S

RETAIN THIS MANUALFOR FUTURE REFERENCE
CHARBROILER MUSTBEKEPT CLEAR OFCOMBUSTIBLES ATALL TIMES

FORYOURSAFETY: Donotstore oruse gasolineorotherflammablevaporsand liquids inthe vicinityofthisoranyotherappliance.

NOTICE: This installation must conform to the National Fuel Gas Code, ANSIZ223.1(LatestEdition).

WARNING: Improper installation, adjustment,alteration, service o r Maintenance can cause property damage,injuryordeath.ReadtheInstallation, OperatingandMaintenance Instructions thoroughlybeforeinstallingorservicingthis equipment.

This equipment has beenengineered toprovideyou with year round dependable service whenused accordingtotheinstructionsinthismanualandstandardcommercialkitchenpractices.

GAS-FIRED
c UL US
LISTED

CLASSIFIED UL EPH
ANSI/NSF4

4/05Form#CBBQ101

BAKERS PRIDE OVEN CO.,INC.
30PineStreet
New Rochelle, NY10801
(914)576-0200 Phone
(914)576-0605 Fax
(800)431-2745 US&Canada
www.bakerspride.com WebAddress

INDEX

SECTION	ITEM		PAGE
1.	**INSTALLATION INSTRUCTIONS**		
	A	Safety Precautions	2
	B	UnpackingInstructions	3
	C	Assembly	3
	D	ConnectingTheGas Lines ToThePropane Tanks	4
	E	InstallingSideTankMountingBrackets	4
	F	InstallingOptionalTank Caddies	5
	G	LeakTesting	5
2.	**LIGHTING INSTRUCTIONS**		
	A	Lighting Instructions	5
	B	Shutdown Instructions	6
3.	**MAINTENANCE INSTRUCTIONS**		
	A	Cleaning Instructions	6
	B	Burner/Orifice Inspection	6
4.	**ACCESSORIES**		
	A	InstructionsForInstallingChar BroilerAccessories	7
5.	**PARTS LISTS & EXPLODED VIEWS**		8
6.	**WARRANTY**		11

GAS SPECIFICATIONS

ModelNumber	PropaneGas BTU/HR@10”W.C.	NaturalGas BTU/HR@3.5”W.C.
CBBQ-60S	160,000	160,000
CBBQ-30S	80,000	80,000

MODELDEFINITIONS

ModelNumber	Width
CBBQ-30S	OverallWidth=32”
CBBQ-60S	Overall Width=62 1/2”

1.INSTALLATIONINSTRUCTIONS

A.SAFETYPRECAUTIONS

FORYOURSAFETY,THEFOLLOWINGSAFETYPRECAUTIONSSHOULDBEFOLLOWEDAND ENFORCED.

IFYOUSMELLGAS:

- SHUTOFFGASSUPPLYTOAPPLIANCE
  EXTINGUISHOPENFLAMES
- IMMEDIATELYCALLYOURGASSUPPLIER

Instructionsmustbepostedinaprominentlocation.Allsafetyprecautionsmustbetakenintheeventtheusersmells gas.Safety informationcanbeobtainedfromyourlocalgassupplier.

1. Thisunitshouldbeonlyoperatedoutdoors.
2. LIGHTING:Followtheinstructionsonpage5and fromthelabelattachedtorightsideofthebroiler.
3. Donotplaceoruseunapprovedaccessoriesoritemsonthebroilingareaoronanypartofthisunit.
4. Donotplacecombustiblesornon-combustiblematerialsintheproximityofthebroilerasthiscouldcausefires orobstructairflowtothemainburners.
5. Thisunitmaybeoperatedwith0"minimumclearancetonon-combustibleconstructioninareasthatarenon-combustiblelocations.For combustibleconstruction installations:Minimum12”eachside,24”back.
6. Thisinstallationmust conformtolocalcodes,orinabsenceoflocalcodestotheNationalFuelGasCodeANSI Z223.1, latest edition.InCanadaitmust conformtocurrentNationalStandard CAN/CGA B 149. 1 & 2. - naturalgas/propaneinstallationcode.
7. Useonlythelegsandcastersprovidedwiththeunit.Alwayslockthecasterbrakesto preventmovementwhile theapplianceisinuse.
8. Broiler mustbedisconnectedfromgassupplyduringanypressuretestingofpipelinesinexcessof½psig (3.45kPa),andisolated(byturningoffgasshut-offvalve)duringanytestinglessthan½psig.
9. Inspect the flexible g as hose(s) priortoeachuse.Ifexcessiveabrasionor wear occurs, or ifthehoseis crackedordamaged itmust bereplaced.
10. LPcylindersusedwiththebroilermustconformtothespecificationsoftheUSDepartmentofTransportation (DOT), orinCanadatotheCanadianTransportCommission.Theconstructionmustincludeacollartoprotect theservicevalvefromphysicaldamage;theymusthaveasafetyreliefdevice thatcommunicatesdirectlywith thevaporspaceofthecylinderandasystemtowithdrawvaporintheverticalposition.Thecylinder musthave propermarking,shutoffvalveandaTypeI(QCC1)serviceoutletconnection.
11. Anyattempttofittheregulator(s)withanythingotherthanthematingTypeI(QCC1)connectorwill negate the important safety features designed intotheTypeIsystem.Fittingastandard#510POLconnectorwill not providetheflowcontrolortemperatureshutoffsafetyfeaturesbuildintothecompleteTypeIsystem.
12. Propanecylindersmustbestoredoutdoorsinawell-ventilatedareaoutofthereachofchildren.
13. Thehandling, filling, use,storageandtransportationof allsizesofLPgascylindersmust beinaccordance withNFPA58,StorageandHandlingofLPGases,orCAN/CGAB149.2,PropaneGasInstallationCode.
14. Surfacesofunitwillbecome hotduringnormaloperationandcancauseburnsand/orseriousunjury.Do not touchahotunitwithoutprotectiveclothing.Allowtheunittocoolbeforecleaningordisassembling.
15. Highwindsmayadverselyaffectburnerperformance.
16. Theminimumambienttemperatureforproperoperationofthisapplianceis50°F(10°C).
17. Retainthismanualforfuturereference.

B.UNPACKINGINSTRUCTIONS:

Carefullyunpackthe broiler andinspectimmediatelyforshippingdamages.Youroutdoorboilerwasshipped inacartondesignedtogivemaximumprotectioninnormalhandling.Itwasthoroughlyinspected before leaving the factoryandthecarrieracceptedandsigned forit.Fileanyclaimsforshippingdamageorirregularitieswiththecarrier.

C.ASSEMBLY:(RefertoFigure“A”)

Theseunassembledpartsshouldbe includedinyourcharbroilerpackage:

1 Grate (s)	3 Frameassembly	5 WaterPan(s)	7 Leg&CasterAssemblies
2 Radiants	4 C arryovertubecover(s)	6 Base	

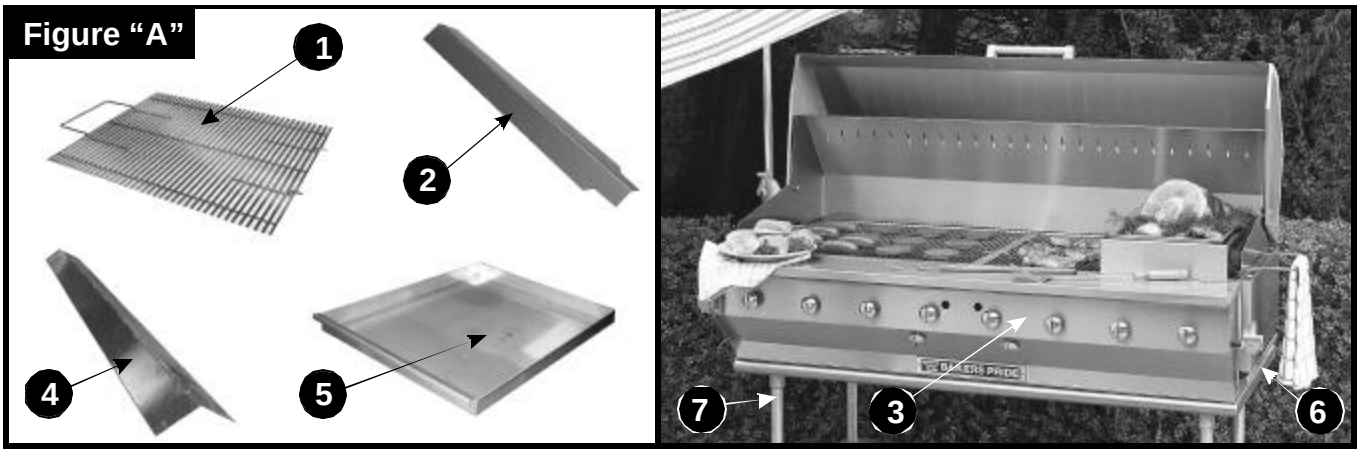

1. Removeshippingbandsfromcarton.
2. Removetopofcarton.
3. Removegratesfromtheunitandsetthemaside.
4. Removeand unwrapanysmallpartspackagesthatare located underneaththegrates.Ifstainless steelparts arecoatedwithPVCfilm,removeitpriorto installation.
5. Liftframeassemblyfromcartonandsetaside.
6. Liftbasefromcartonandplaceitupsidedownon ground.
7. Installlegs&casterassembliesandflipthestandoverintotheuprightposition.
8. Mount sidetankbracketsto theunit(seePage5,FiguresA-1&A-2).
9. Placethebroileronthestand.
10. Placethecarryovertubescover(s)ontheirbracketstocoverthetubes.
11. Placetheradiantson theirfrontandrearsupportpinsovereach burner.
12. Placegratesintoframeassembly.

D.CONNECTINGTHEGASLINESTOTHEPROPANETANKS

- Newpropanetanksareshippedemptywithnopressure andmustbepurgedofairandfilledwithpropane per NPGA(NationalPropaneGasAssociation)recommendationspriortoinitialuse.
- Tankbrackets mustbemountedtothechairbroilerstand(refertoparagraph“E”below).
- Tanks mustbemountedsecurelytothemountingbrackets (refertoparagraph “E”below).
- Install thegreenplasticconnectorontotheexternalthreadonthe tank valve. Turnitclockwise andhand tighten.The plastic nut is designed for easygripandallowsuser friendly, wrench-less connection. It is thermallysensitiveandwill shutofftheflowofgasifsubjectedtotemperaturesbetween 240°F and300°F. TypeI (Q.C.C.1)connectionsystemwillnotallowgasto flowuntilapositivesealhasbeen made(SeeFigure “A-3”).
- Makesuretheventontheregulatorisfacingdown(towardtheground)sothatwaterandotherliquidsdonot getintotheregulator.

IMPORTANTNOTE:

All 20lbLPcylindersareprovided with thenew Type I ACME valvewithan OPD(overfill protectiondevice) installed. The40lb LP cylinders have a Type I ACME servicevalve witha one-way valvethat onlyallows propanetoflowoutofthevalve. The40lbcylindercannotbefilledthroughthisTypeIACMEservicevalveas the20lbcylindersare. The40lb cylindershavea1-3/4"ACMEmalefillconnectionwithabuiltinOPDto protectthecylinderfrombeingoverfilled. Besurethatyourlocalpropanesupplierhasthecorrectadapterto fillthrougha1-3/4"ACMEmalefillingconnector.

20lbcylindersmust beusedinthevertical(upright)position and40lbcylindersmustbe usedinthe horizontal (layingdown)position.

E.INSTALLINGSIDETANKMOUNTINGBRACKETS

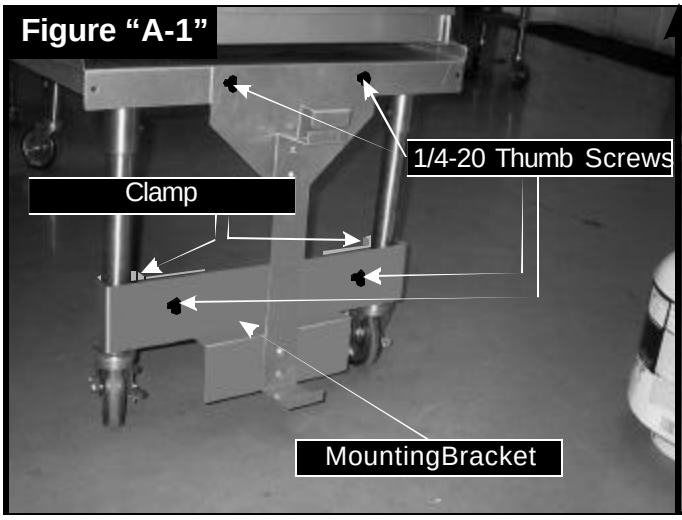

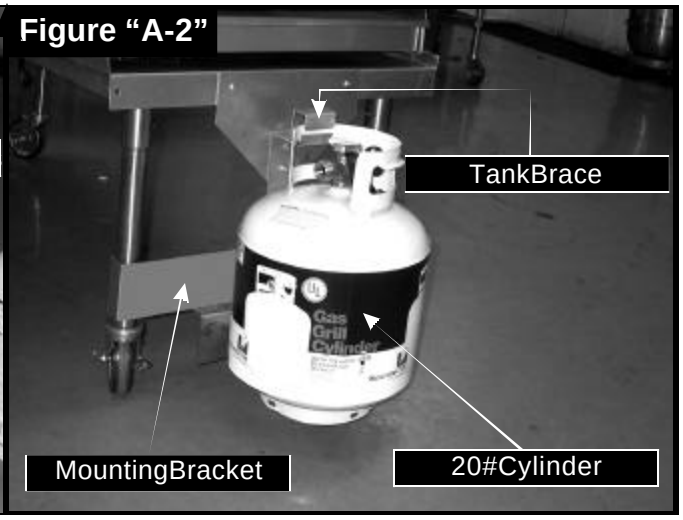

SideRackInstallation:

- Siderackshavetobeinstalledonbothsidesof the60"standandontherightsideofthe30"standifyour unit came with 20lb LP cylinders. Optional 40 lb horizontal cylinders come with single or double tank caddy.
- Attach the tankracktothesideofthestandwith two1/4-20" thumb screws provided (seefig.A-1).Make surethescrewsareproperlytightened.
- Clampmountingbrackettothelegswiththeclampsandfastenwith(2)thumbscrews.
- Hangthe20lbcylinderontherackwithservicevalveoutlet facingthefrontoftheunit(seefig.A-2)
- Fastenthetankwithtankbraceandwingnut.
- Makesurethe tanksaresecureintheirracksandcannotmove

F.INSTALLINGOPTIONALTANKCADDY:

- Ifyouunitisequippedwithoptional tank caddy, it has to be placed underneath the broiler and secured in placeby(2)hooksprovided(see fig.“A-3”).Thefrontofthecaddywill be raised off the ground toprevent possible movement and putting strainonconnectionhoses.
- LP gas cylinder(s) have to be securely mountedtothecaddywith thumbscrews.Theywillonlyworkin thehorizontalposition.

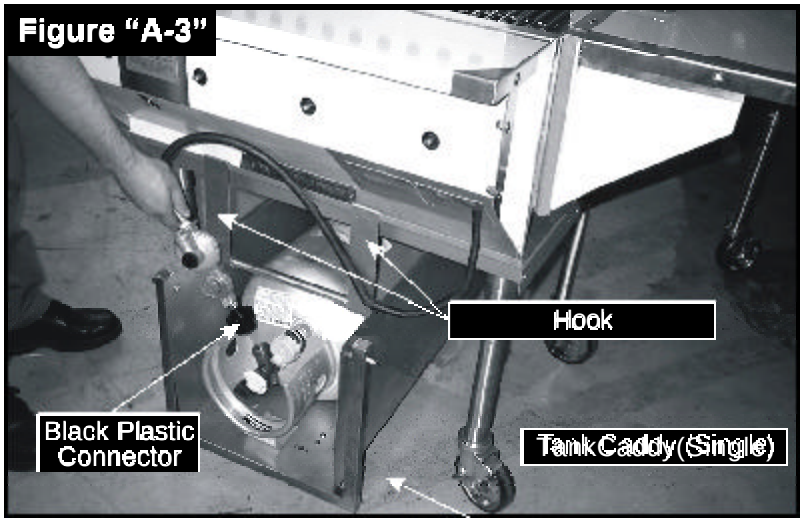

Figure “A-3”

G.LEAKTESTING:

· Theplumbingmust nowbetestedfor gas leaks before use. Turnall propane tank, burner control and carryovercontrolvalvestotheOFFposition.Wetallgaslinefittingsandconnectorswithasolution ofsoapywater(or commercialleakdisclosing liquid). Slowly opentheepropanetankvalve(s)andlook forbubblesoffoam atanyofthe jointsofthesystem.Ifaleakisfound,closethetankvalvesimmediatelyandcallyourlocaldealerorthemanufacturer. Ifthegasconnectionsareleak-free,theunitisreadytouse.Followthelightinginstructions.

2. LIGHTING INSTRUCTIONS

A.LIGHTINGINSTRUCTIONS: Fillwaterpans towithin½"oftopedges(thiswillcontrol grease flare-ups,providefor ease ofcleaningandkeep cookedfood moist).Re-fillpanswithwaterwhen theyevaporatetowithin½"ofthe bottom ofthepans. Failuretokeepwaterinthewaterpanscouldleadtogreasefiresandwillvoidthewarranty.

1. Checkthatthetankmountingbracketsaresecurely mountedon theunit.
2. Opentheroll-uphoodifsoequipped.Turnall theburnerknobsand carryovertubeknobstothe OFFposition and slowlyopenthegas tankvalves.
3. Turnthecarryover tube knobononesidefullycounter-clockwise to the ONposition. Inserta lit,extralong matchora gaslighterflamethoughthehole onthe samesideinthefrontpanel.For60”broilersrepeatthe sameprocedure fortheotherside.
4. Checkthattheentirecrossover tubeis litbylookingthrough thelighterhole(s)locatedonthefrontpanel.Ifthe carryovertube(s) willnot lightor staylit,shutoffthegassupplyanddonotusetheunit.Wait5minutesbefore attemptingtore-lighttheunit.(SeeFigure“B”)
5. After lighting the crossover tube(s), open thedesiredburnervalvesand observethatthe burners light completely fromthecrossovertube(s).

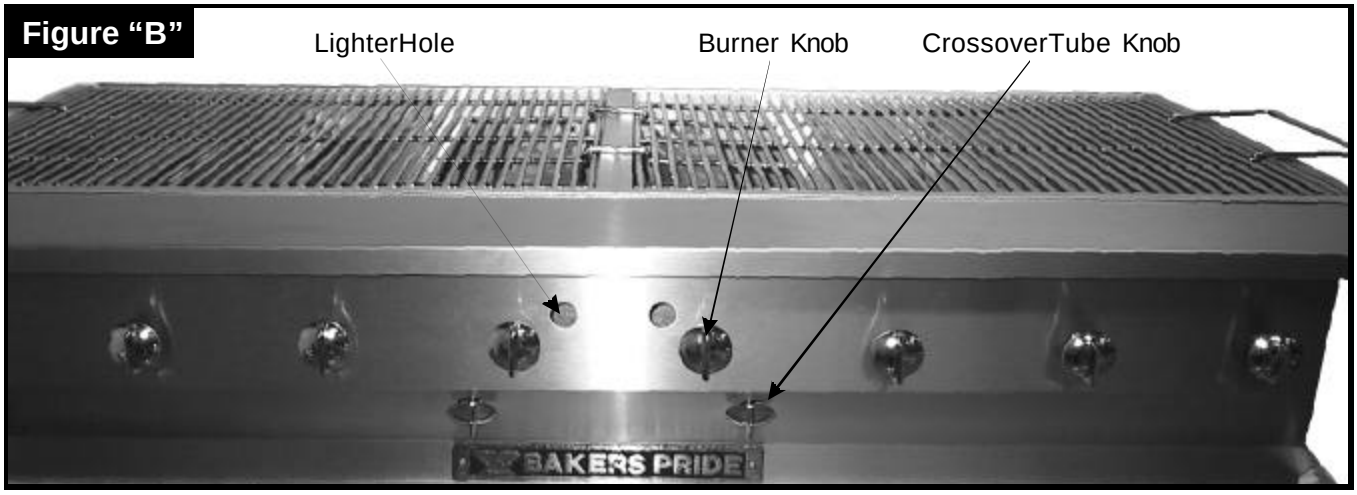

NOTE: Ifthetank valves arenotopenedvery slowly, anexcessflowvalveinthetank connector fitting(a safety feature)mayrestrict theflowofgastotheunitresultinginlittleorno flameattheburners.Should thishappen, follow theshutdown instructionsandbe suretoshutofftanksandremoveandre-attach thetankconnectorsasinstructed. This is necessaryto re-set a closedexcessflowvalve.Repeatallstepsofthelightinginstructions.Theappliance shouldnowfunctionnormally.

B.SHUTDOWNINSTRUCTIONS

To shutdown theunit,turn all burners and carryover tubeknobsclockwisetotheOFF position.Closegastank valve(s),disconnect propanetank(s)and leavethemoutdoors.

3. MAINTENANCEINSTRUCTIONS

A.CLEANINGINSTRUCTIONS

- Cleantheunitregularlyafteruse.
- Top Grates:after removing fromtheunit,usewarm soapywateranda stiffbristled brush or plastic pad. Cookinggratesmustbe removedtosteamcleanorpressure wash.Donotusesteelwoolorabrasivepadsas they maydegradethemetalfinish.Alwayscleanstainlesssteelpanelsalongthegrain.
- Radiants/Covers: These willneedlittleornocleaningduetohighin-usetemperatures.Ifnecessarycleanas topgrates.
- Broilerbody:Use warm, soapy water andastiffbristlebrushorplasticpad.Do notusechlorine,bleachor othercausticchemicals. Becareful nottogetwaterintotheburnersorcarryovertubes.Donotpressure wash.
- WaterPans/Stand:Cleanliketopgrates.

B.BURNER/ORIFICEINSPECTION

1. Removethefront shelfbyremovingthetwoscrewsattheends.
2. Slidefrontshelfforwardandthenliftitofftheunit.
3. The frontoftheburners,thevalvebodies,and orificesarenowexposedforinspection.Looking down intothe unit,compareeachassemblywithfigure“C”foralignment.
4. Ifthecomponents arenotalignedas shown inthe diagram, discontinue use andcontact theappliance manufacturer.
5. Ifthecomponents arealigned, carefullyreplacethe service shelf andre-insertandtightenthe screws.Your unit isreadyforuse.

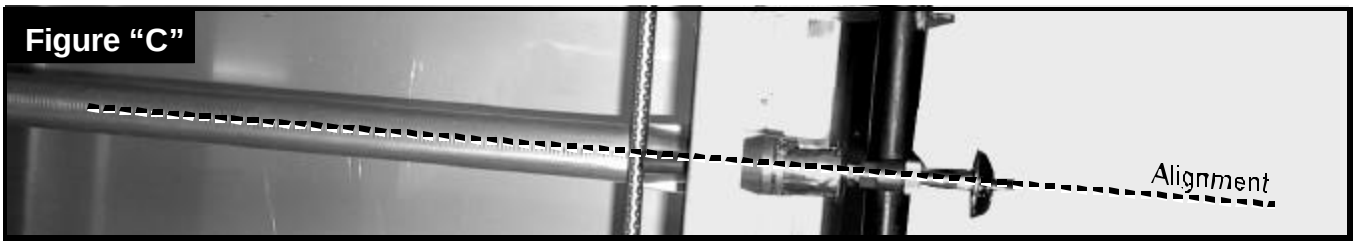

4.INSTRUCTIONSFORINSTALLINGOUTDOORCHARBROILERACCESSORIES

YournewCharBroilerhasbeenshippedinseveral cartons,partly assembled.Please followtheinstructions belowwhichdetailtheassemblyofshelves,hoods,windguards,tankbrackets,tankcaddyandstand.

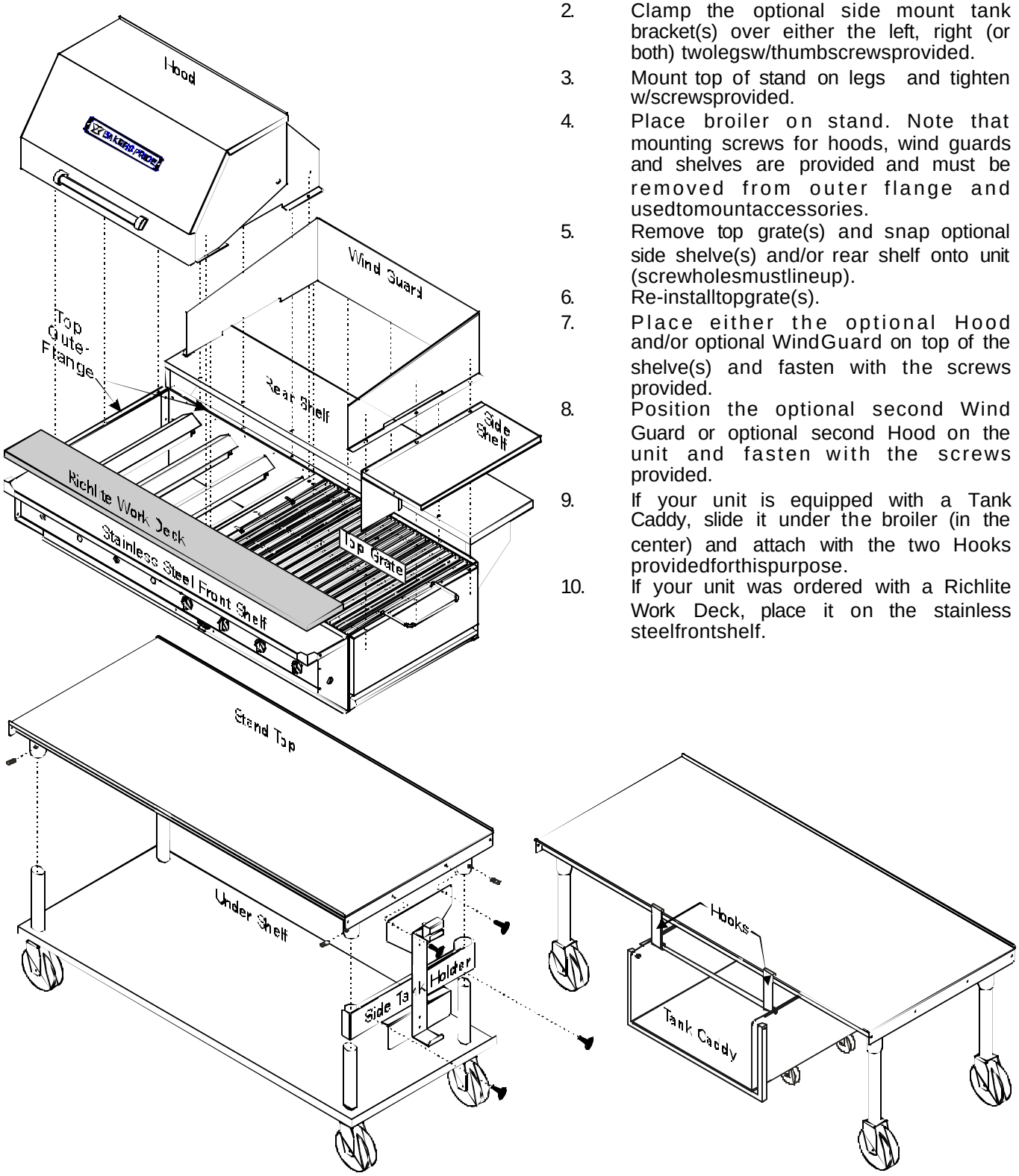

1. To installtheoptionalundershelf,mount it over the (4) legs & casters and tighten w/screwsprovided.
2. Clamp the optional side mount tank bracket(s) over either the left, right (or both) twolegsw/thumbscrewsprovided.
3. Mount top of stand on legs and tighten w/screwsprovided.
4. Place broiler on stand. Note that mounting screws for hoods, wind guards and shelves are provided and must be removed from outer flange and usedtomountaccessories.
5. Remove top grate(s) and snap optional side shelve(s) and/or rear shelf onto unit (screwholesmustlineup).
6. Re-installtopgrate(s).
7. Place either the optional Hood and/or optional WindGuard on top of the shelve(s) and fasten with the screws provided.
8. Position the optional second Wind Guard or optional second Hood on the unit and fasten with the screws provided.
9. If your unit is equipped with a Tank Caddy, slide it under the broiler (in the center) and attach with the two Hooks providedforthispurpose.
10. If your unit was ordered with a Richlite Work Deck, place it on the stainless steelfrontshelf.

CBBQ-30S/60S

Outdoor Gas Char Broiler

30PineStreet • NewRochelle • NewYork • 10801
914/576-0200
914/576-0605 fax
1 - 800-431-2745 US&Canada
www.bakerspride.com webaddress

BAKERS PRIDE

FigureA — *Exterior / Interior*

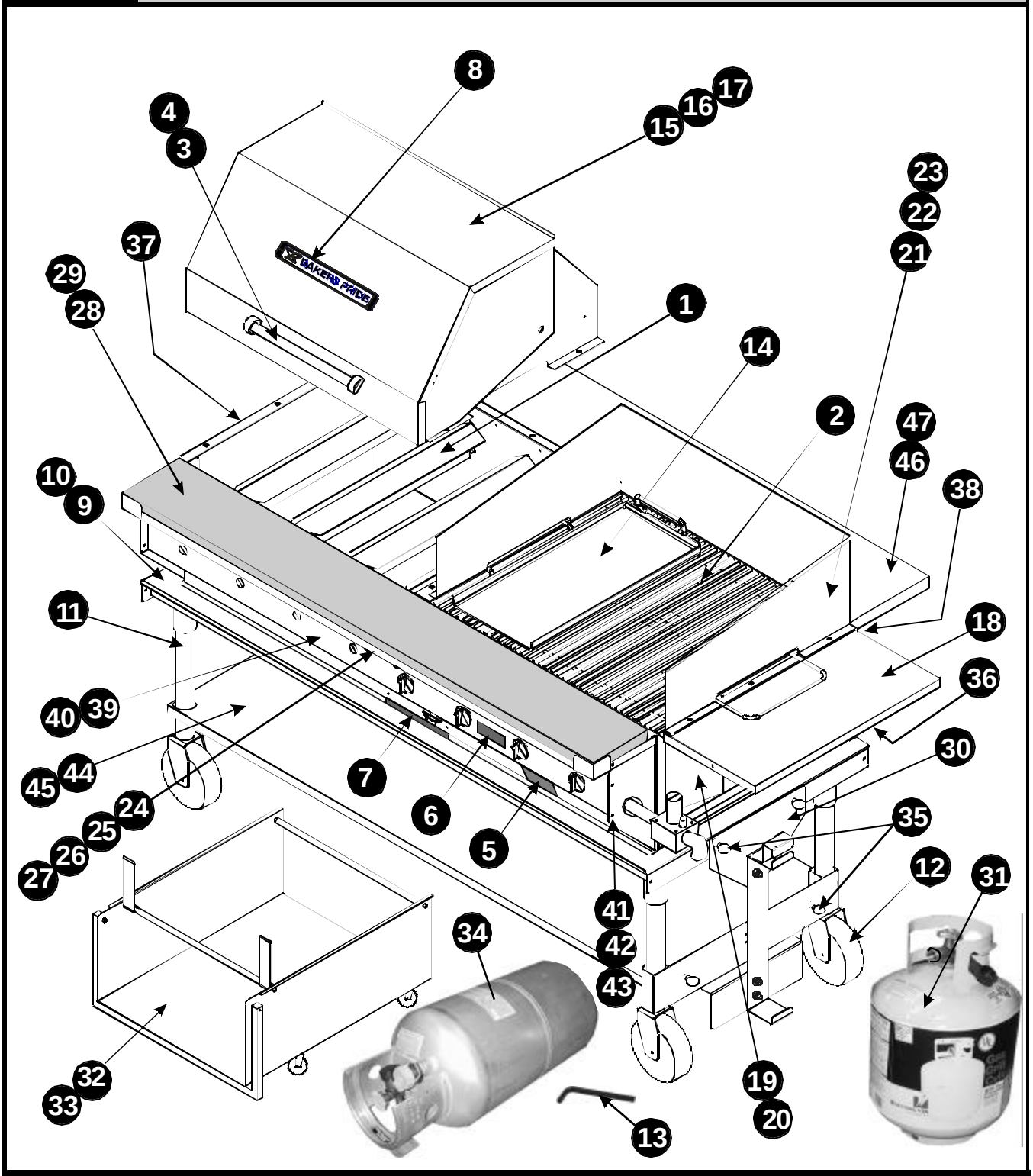

Note:When ordering,ALWAYS specifyPart#,Model#, Serial#,Voltage/Phase&typeofGas. 4/05

30PineStreet•NewRochelle•NewYork•10801
914/576-0200
914/576-0605 fax
1-800-431-2745 US&Canada
www.bakerspride.com webaddress

CBBQ-30S/60S

Outdoor GasChar Broiler

Figure A — Exterior/ Interior

Item	Part#	Description
1	G6013K	Radiant
2	T1237A	Grate, 24"
3	S1316U	DoorHandleKit,10"
4	Q2041A	Screw, 1/4-20x1/2
5	U1345A	WarningLabel
6	U1346A	LightingInstructions
7	U1044A	Name Plate,BP Logo,8"
8	Q1043A	Name Plate,BP Logo,13 1/4"
9	G6062T	StandAssy,30"
10	G6063T	StandAssy,60"
11	S1351A	Leg,15"S/S(each)
12	S1349A	Caster w/Lock
13	Q5001A	AllenWrench,5/32
14	T1241U	Griddle PlateAssy,11"
15	G6033T	HoodAssy,(CBBQ30)
16	G6025T	HoodAssy,(CBBQ60)
17	G6056T	HoodAssy,1/2Size(CBBQ60)
18	G6037K	SideShelf,12"
19	G6038K	ShelfSupport,Left
20	G6039K	ShelfSupport,Right
21	G6057K	Windshield,1/2size(CBBQ60)
22	G6020K	Windshield,60"(CBBQ60)
23	G6033T	Windshield,30"(CBBQ30)
24	G6021K	WorkDeck,S/S,8"(CBBQ30)
25	G6017K	Work Deck, S/S,8"(CBBQ60)
26	G6021U	Work Deck, S/S,Richlite(CBBQ30)
27	G6017U	Work Deck, S/S,Richlite(CBBQ60)
28	T1240A	RichliteDeck(CBBQ30)
29	T1239A	RichliteDeck(CBBQ60)
30	G6043U	TankSideBracketAssy,20# Cylinder
31	R1137A	Cylinder,20#,LP
32	G6045T	TankCaddyAssy,Single40# Cylinder
33	G6044T	TankCaddyAssy,Double40# Cylinder
34	R1139A	Cylinder,40#,LP
35	Q2009A	ThumbScrew, 1/4-20
36	G6029K	OuterSide,Right,S/S
37	G6030K	OuterSide,Left,S/S
38	G6042K	OuterBack,S/S,30"
39	G6022K	FrontPanel,30"
40	G6019K	FrontPanel,60"
41	Q2046A	Nut,1/4-20
42	Q2043A	Screw, 1/4-20x1/2
43	Q3005A	Washer,Split-Lock,1/4
44	98US3030	Undershelf(CBBQ30)
45	98US3060	Undershelf(CBBQ60)
46	G6074K	Rear Shelf(CBBQ-30)
47	G6041K	Rear Shelf(CBBQ-60)

Figure B — Accessories

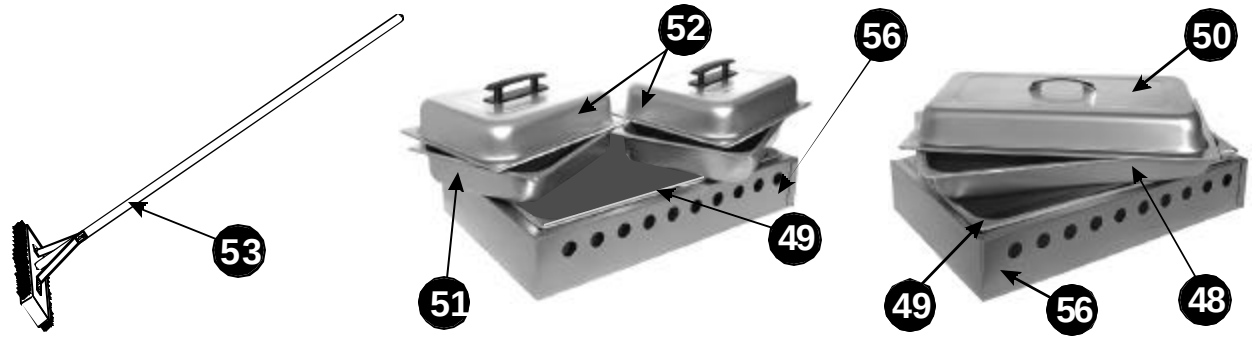

Figure B — Accessories

Item	Part #	Description
48	9822F4	Pan,S/S4DeepFood, Full Size
49	98DWP200	Pan,S/S45/8DeepWater, FullSize
50	98DC200F	Cover,45/8Deep,DomePan, FullSize
51	98200H4	Pan,S/S4DeepFood, 1/2Size
52	98DC200H	Cover,45/8Deep,DomePan, 1/2Size
53	T5104V	TwinHeadGrateBrush
*54	T1244U	In-LineGriddle
*55	CBQOPT17	Vinyl C over,30"
	CBQOPT18	Vinyl C over,60"
56	G6034U	SteamerSupport(FullSize)

NOTSHOWN

4/05 **Note:Whenordering,ALWAYSspecifyPart#, Model #, Serial#,Voltage/Phase&typeofGas.**

CBBQ-30S/60S

Outdoor Gas Char Broiler

30PineStreet•NewRochelle•NewYork•10801
914/ 576-0200
914/ 576-0605 fax
1-800-431-2745 US&Canada
www.bakerspride.com web address

BAKERS PRIDE

Figure C ***Manifold, Burner, Valve,Orifice, Pilot Tube***

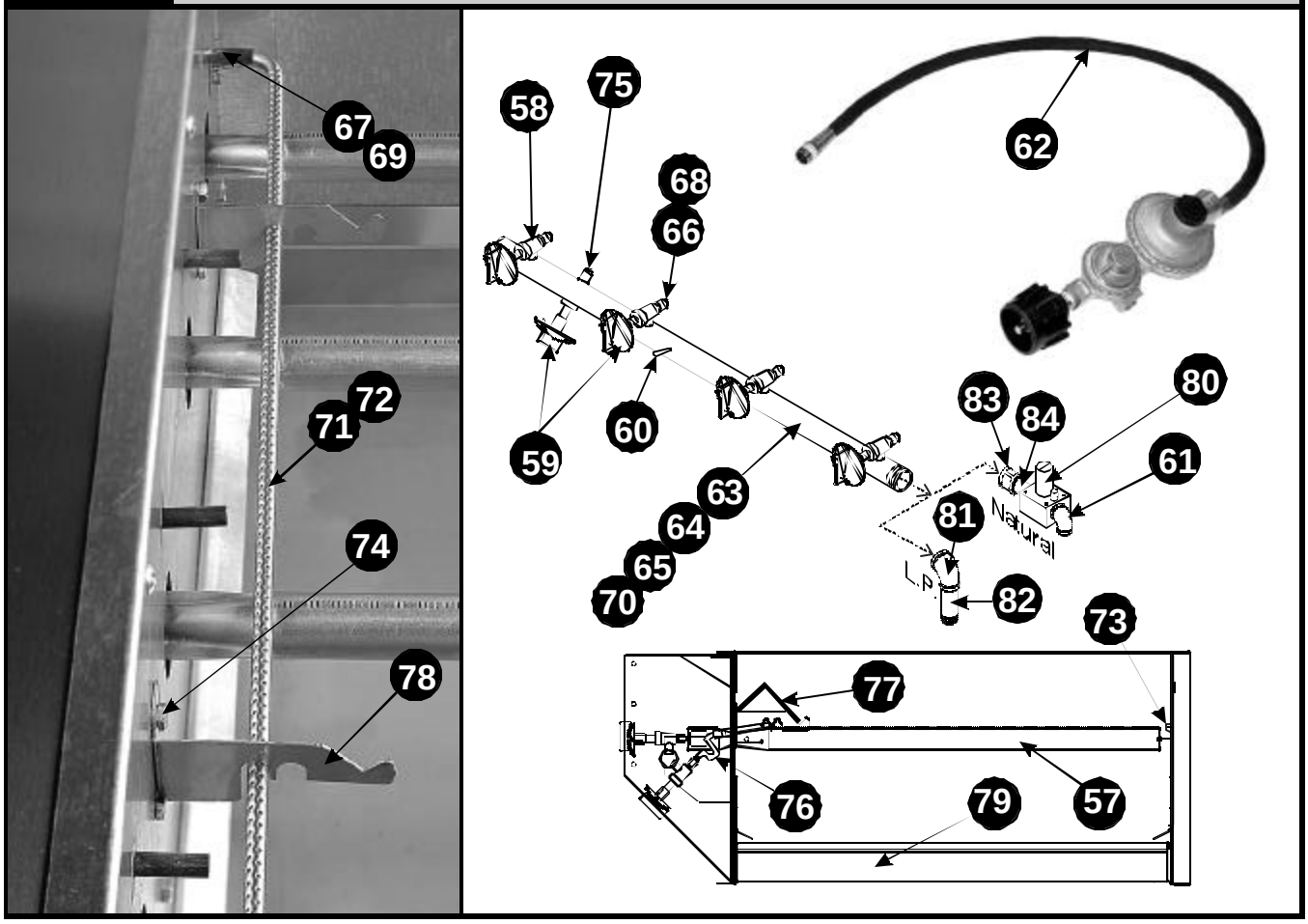

Figure C ***Manifold,Burner, Valve, Orifice, Pilot Tube***

Item	Part#	Description	Item	Part#	Description
57	L5103A	Burner	71	R3194A	Carry-overTube,Left
58	R3032X	GasValve(noknob)	72	R3195A	Carry-overTube,Right
59	S1094A	Knob, GasValve, ON-OFF	73	Q1459A	Screw, 10-32x 3/8
60	N3023A	Plug, 1/8"	74	Q2027A	Screw, 1/4-20x1/2
61	N3081A	Elbow,3/8"(Prior to6/03Only)	75	N3079A	Adapter,1/8NPT
62	R3196A	HoseAssy	76	N5855P	PilotTube
63	R1135P	ManifoldAssy,Right(CBBQ30/60LP)	77	G6014K	Runner TubeCover
64	R1136P	ManifoldAssy,Left (CBBQ60LP)	78	G6012K	Runner TubeBracket
65	R1140P	ManifoldAssy,(CBBQ60Nat. only)	79	G6011K	WaterPan
66	R3130A	Orifice#44,Nat.(Burner)	80	M1184A	PressureRegulator, 3.5"WC,Nat.
67	R3199P	Orifice#60,Nat.(Pilot)	81	N3091A	ReducingElbow,3/4 x 3/8 (Naturalonly)
68	R3197P	Orifice#53L.P. (Burner)	82	N5818A	Nipple, 3/8x31/2(LPonly)
69	R3198P	Orifice,#74L.P.(Pilot)	83	N3019A	Coupling,3/4(Naturalonly)
70	R1141P	ManifoldAssy,Right(CBBQ30 Natonly)	84	N5218A	Nipple, 3/4x3(Naturalonly)

Note:When ordering, ALWAYSspecifyPart#,Model#,Serial#, Voltage/Phase&typeofGas. **4/05**

6. BAKERS PRIDE LIMITED WARRANTY

30 Pine Street New Rochelle, New York 10801
914/576-0200 • US & Canada: 1-800-431-2745 • fax 914/576-0605

WHAT IS COVERED

This warranty covers defects in material and workmanship under normal use, and applies only to the original purchaser providing that:

- The equipment has not been accidentally or intentionally damaged, altered or misused;
- The equipment is properly installed, adjusted, operated and maintained in accordance with National and local codes, and in accordance with the installation instruction provided with the product;
- The serial number rating plate affixed to the equipment has not been defaced or removed.

WHO IS COVERED

This warranty is extended to the original purchaser and applies only to equipment purchased for use in the U.S.A.

COVERAGE PERIOD

Cyclone Convection Ovens: BCO Models: One (1) Year limited parts and labor; (1) Year limited door warranty.
GDCO Models: Two (2) Year limited parts and labor; (2) Year limited door warranty.
CO11 Models: Two (2) Year limited parts and labor; (5) Year limited door warranty.
All Other Products: One (1) Year limited parts and labor. Warranty period begins the date of dealer invoice to customer or ninety (90) days after shipment date from BAKERS PRIDE - whichever comes first.

WARRANTY COVERAGE

This warranty covers on-site labor, parts and reasonable travel time and travel expenses of the authorized service representative up to (100) miles, round trip, and (2) hours travel time. The purchaser, however, shall be responsible for all expenses related to travel, including time, mileage and shipping expenses on smaller countermodels that may be carried into a Factory Authorized Service Center, including the following models: PX-14, PX-16, P18, P22S, P24S, PD-4, PDC, WS Series and BK-18.

EXCEPTIONS

All removable parts in BAKERS PRIDE Char-broilers, including but not limited to: Burners, Grates, Radiants, Stones and Valves, are covered for a period of SIX MONTHS.

All Ceramic Baking Decks are covered for a period of THREE MONTHS. The installation of these replacement decks is the responsibility of the purchaser.

The extended Cyclone door warranty years 3 through 5 is a parts only warranty and does not include labor, travel, milage or any other charges.

EXCLUSIONS

- Negligence or acts of God,
- Thermostat calibrations after (30) days from equipment installation date,
- Air and Gas adjustments,
- Light bulbs,
- Glass doors and door adjustments,
- Fuses,
- Char-broiler work decks and cutting boards,
- Tightening of conveyor chains,
- Adjustments to burner flames and cleaning of pilot burners,
- Tightening of screws or fasteners,
- Failures caused by erratic voltages or gas supplies,
- Unauthorized repair by anyone other than a BAKERS PRIDE Factory Authorized Service Center,
- Damage in shipment,
- Alteration, misuse or improper installation,
- Thermostats and safety valves with broken capillary tubes,
- Accessories—spatulas, forks, steak turners, grate lifters, oven brushes, scrapers, peels, etc.,
- Freight—other than normal UPS charges,
- Ordinary wear and tear.

INSTALLATION

Leveling and installation of decks, as well as proper installation and check out of all new equipment—proper appropriate installation and use materials—is the responsibility of the dealer or installer, not the manufacturer.

REPLACEMENT PARTS

BAKERS PRIDE Genuine Factory OEM parts receive a (90) day materials warranty effective from the date of installation by a BAKERS PRIDE Factory Authorized Service Center.

This Warranty is in lieu of all other warranties, expressed or implied, and all other obligations or liabilities on the manufacturers part. BAKERS PRIDE shall in no event be liable for any special, indirect or consequential damages, or in any event for damages in excess of the purchase price of the unit. The repair or replacement of proven defective parts shall constitute a fulfillment of all obligations under the terms of this warranty.

Form # U4177A3/04

BAKERS PRIDE OVEN CO., INC.
30 Pine Street
New Rochelle, NY 10801
(914) 576-0200 Phone
(914) 576-0605 Fax
(800) 431-2745 US & Canada
www.bakerspride.com Web Address