BAKERS PRIDE

INSTALLATION AND OPERATING INSTRUCTIONS

Cyclone SERIES

ELECTRIC CONVECTION OVENS

Models: BCO-E and GDCO-E

INTENDED FOR OTHER THAN HOUSEHOLD USE
RETAIN THIS MANUAL FOR FUTURE REFERENCE
OVEN MUST BE KEPT CLEAR OF COMBUSTIBLES AT ALL TIMES

FOR YOUR SAFETY

Do not store or use gasoline or other flammable vapors and liquids in the vicinity of this or any other appliance.

WARNING

Improper installation, adjustment, alteration, service or maintenance can cause property damage, injury or death. Read the Installation, Operating and Maintenance Instructions thoroughly before installing or servicing this equipment.

WARNING

Initial heating of oven may generate smoke or fumes and must be done in a well-ventilated area. Overexposure to smoke or fumes may cause nausea or dizziness.

This equipment has been engineered to provide you with year round dependable service when used according to the instructions in this manual and standard commercial kitchen practices.

c UL US LISTED

CLASSIFIED UL EPH

Form # 8898400 1-05

BAKERS PRIDE OVEN CO., INC.
30 Pine Street
New Rochelle, NY 10801

(914) 576-0200 Phone
(914) 576-0605 Fax
(800) 431-2745 US & Canada
www.bakerspride.com Web Address

INDEX

I. INSTALLATION INSTRUCTIONS

SECTION	*ITEM*	*PAGE*
A	Receiving	3
B	Set-up/Mounting	3
C	Installation with Casters	4
D	Location & Minimum Clearances	4
E	Electrical Connections	4
F	Flue Connection Ventilation	5
G	Initial Cleaning	5
H	System Check - Rotary Controls	5

II. OPERATING INSTRUCTIONS

SECTION	*ITEM*	*PAGE*
A	General Instructions	6
B	Operation Sequence For Rotary Controls	6
	1. Cook Only	6
	2. Timed Cooking	6
	3. Cook & Hold	7
	4. Steam Injection (Optional)	7
	5. Oven Cool Down	7
C	Cleaning	7
D	Servicing	8
	1. Stacking Instructions	9
	2. Leg Assembly Instructions	10
E	Wiring Diagrams	11
	1. Single Phase 208V or 240V Wiring Diagram (Dial Control)	11
	2. Three Phase 208V or 240V Wiring Diagram (Dial Control)	11
	3. Single Phase 208V or 240V Wiring Diagram (CH-100 Control)	12
	4. Three Phase 208V or 240V Wiring Diagram (CH-100 Control)	12
	Warranty	15

I. INSTALLATION INSTRUCTIONS

A. RECEIVING

Read the notice on the outside carton regarding damage in transit. Damage discovered after opening the carton is “CONCEALED DAMAGE.” Carrier must be notified immediately to send an inspector and to furnish forms for claims against the carrier.

When the oven arrives, it should consist of:

- A crate or carton containing your new oven (two for a stacked unit).
- A carton containing four 31” legs with mounting hardware (set of four 6” legs is supplied for stacked installations).
- A carton containing a Flue Adapter and a Draft Hood. Optional: for Direct Venting (Not available for European Community Countries).

B. SET UP / MOUNTING:

NOTE:
This appliance must be installed by competent personnel in accordance with the rules in force.

Your oven will be packed sitting on its bottom. The skid may be left under the oven for convenience in further handling. Unpack carefully, avoiding damage to the Stainless Steel front and/or trim. If concealed damage is found, follow the instructions detailed in Section A (Receiving). Keep the area around the ovens free and clear of combustible materials. Do not store any materials on top of or under any oven. The provision of adequate air supply to your oven for ventilation is essential. As a minimum, observe the clearances detailed in Section D (Location). Provide adequate ventilation and make up air in accordance with local codes. Servicing your oven is done through the front control panel and right side access cover. Ensure that these areas are kept unobstructed for easy access.

For a single unit: Refer to Figure 4

(1) Tilt Oven over to left-hand side and attach two 31” legs on the right-hand side with four 3/8-16” bolts and washers. Tighten firmly.
(2) Using proper lifting equipment, lift up the left-hand side and attach two 31” legs on the left-hand side the same way.

For a stack of two ovens: Refer to Figure 3

(1) Remove flue from top oven and replace with flue-adaptor supplied in the stacking kit.
(2) Tilt lower unit over to the left side and position two 6" legs on the right side (one for front and one for back), secure in place by using 4 bolts (3/8-16) per leg. Tighten firmly.
(3) Using proper lifting equipment, lift up the left side of the unit and attach the other two legs in the same way.
(4) Using the lifting equipment, raise the top oven to proper height and slide onto top of the bottom oven. Line up sides and front and fasten to each other at the rear of the units by using a mounting bracket supplied in the stacking kit.

To assemble an open rack stand: Refer to Figure 2

(1) Loosen 12 bolts (attaching 31” legs) slightly.
(2) Remove 4 inner bolts, 1 from each of the 4 legs, place top right angle and top left angle underneath and tighten these 4 bolts.
(3) Insert “Open Rack Shelf” and tighten into place with eight 3/8-16 screws, washers and nuts.
(4) Position “Rack Supports” and tighten in place using 4 each of flat washers and 5/16-18 Hex Nuts.

C. INSTALLATION WITH CASTERS (OPTIONAL):

Four casters (two with wheel brakes) and the mounting hardware are packed and included in the shipment if ordered. Install casters with wheel brakes on the front of the unit. Installation must conform to **UL 197: Electrical Supply Connections For Permanently Connected Appliances.** It requires that permanently connected appliances with casters be provided with a means for securing the appliance to the building structure to limit the movement of the appliance.
Oven Restraint: When casters are installed on either a single or double unit, a fixed restraint must be used to limit the movement of the appliance without depending on or transmitting stress to the electrical conduit. The restraint (a heavy-gauge cable) should be attached to the rear legs of the oven on which casters are mounted. If disconnection of the restraint is necessary, the restraint must be reconnected after the oven has been repositioned in its permanent location. The appliance shall be installed using flexible conduit.

D. LOCATION AND MINIMUM CLEARANCES:

Move the oven to its final location keeping the minimum clearance from the back of the oven to the wall. This clearance is necessary for safe operation and to provide proper air flow.

MINIMUM CLEARANCES FROM COMBUSTIBLE AND NONCOMBUSTIBLE CONSTRUCTION	
	Under Ventilation Hood
RIGHT WALL	1”
LEFT WALL	1”
REAR WALL	3”

SUITABLE FOR INSTALLATION ON COMBUSTIBLE FLOOR WHEN INSTALLED WITH LEGS OR CASTERS PROVIDED.

CAUTION: DO NOT SET THE OVEN WITH ITS BACK FLAT AGAINST THE WALL. IT WILL NOT OPERATE PROPERLY UNLESS THERE IS AT LEAST THREE INCHES BREATHING SPACE BEHIND THE OVEN

NOTICE: LOCAL CODES REGARDING INSTALLATION VARY GREATLY FROM ONE AREA TO ANOTHER. THE NATIONAL FIRE PROTECTION ASSOCIATION, INC., STATES IN IT’S NFPA 96 LATEST EDITION THAT LOCAL CODES ARE “AUTHORITY HAVING JURISDICTION” WHEN IT COMES TO REQUIREMENTS FOR INSTALLATION OF EQUIPMENT. THEREFORE, INSTALLATIONS SHOULD COMPLY WITH ALL LOCAL CODES.

E. ELECTRICAL CONNECTION:

Install according to the spacing requirements listed in the installation section of this manual. We strongly recommend having a competent professional install this equipment. A licensed electrician should make the electrical connections and connect power to the unit. Local codes should always be used when connecting these units to electrical power. In the absence of local codes, use the latest version of the National Electrical Code.
Note: For supply connections use No. 6 AWG wires suitable for at least 90°C.

The oven, when installed, must be electrically grounded in accordance with local codes and/or the latest edition of the National Electrical Code ANSI/NFPA No. 70 in the USA (Canadian Electrical Code CSA Standard C22.1, Part 1 in Canada).

In Europe, the appliance must be connected by an earthen cable to all other units in the complete installation and, thence, to an independent earth connection in compliance with EN 60335-1 and/or local codes.

Electrical power is to be supplied to the oven(s) by means of hard wiring, which is to be performed by a qualified licensed electrician.

BCO-E, GDCO-E											
Model	KW	Voltage	Phase	Amps				Motor-50hz		Motor-60hz	
				Line 1	Line 2	Line 3	N	RPM (Low)	RPM (High)	RPM (Low)	RPM (High)
BCO-E, GDCO-E	10.5	208	1	48	48	-	-	725	1425	850	1725
	10.5	208	3	30	30	28	-	725	1425	850	1725
	10.5	220-240	1	44	44	-	-	725	1425	850	1725
	10.5	220-240	3	26	26	24	-	725	1425	850	1725
Each oven requires separate electrical connectionsl											

Normal factory connections are made for 208 V. A.C. or 208/240 V.A.C., 60 hz.

This unit is provided with a permanently lubricated electric motor. A wiring diagram may be found on the back of the service panel on the right-hand side and also in this manual.

F. FLUE CONNECTION VENTILATION:

Installation under ventilation hood (standard):
Local inspectors and ventilation specialists should be consulted so that the design and the installation of the hood conform to local/municipal codes. In the U.K., follow ventilation requirements as detailed in B.S. 5440.

NOTE: DO NOT PUT A DAMPER IN THE FLUE AND DO NOT CONNECT A BLOWER DIRECTLY TO THE FLUE.

If the flue runs directly to the free air outside the building, use a wind deflector or a UL listed vent cap at the end of the pipe. Termination of the vent must be at least two feet above the highest part of the roof within ten feet. REF: AGA CATALOG NO. Xh0474.

G. INITIAL CLEANING :

Always clean equipment thoroughly before first use. Clean the protective oil from the metal parts and interior of baking chamber with a solution of washing soda or the other grease dissolving material.

H. SYSTEM CHECK- ROTARY CONTROL (standard):

(1) Open the oven door.
(2) Turn Selector Switch to “HI.” The green indicator light near Selector Switch and oven light will illuminate.
(3) Close the door. Oven lights will go off and fan will run. Make sure fan is rotating clockwise looking from front.
(4) Press Oven Light switch. Oven light will go on and will go off as switch is released.
(5) Turn the thermostat knob. The amber indicator light near the thermostat will illuminate and the heating elements will come on.

(6) Turn the timer knob past 10 minutes and back to 2 minutes. At the end of 2 minutes the buzzer will sound. Reset by turning to “0.” All settings below 10 minutes require turning past 10 minutes and then back to the time required.
(7) Open the oven doors. Oven lights will go on and elements and fan will go off.
(8) Turn Selector Switch to “Cool Down” position. The fan will run to cool down the oven.
(9) Turn Selector Switch to “0” position.
(10) Close the oven doors.

NOTE: WITH THE DOORS CLOSED, THE POWER SWITCH “ON” AND THE SELECTOR SWITCH IS IN ANY POSITION OTHER THAN “0”, THE OVEN WILL START HEATING AS SOON AS THE SET TEMPERATURE IS HIGHER THAN THE OVEN TEMPERATURE.

THERMOSTAT INDICATOR LIGHT GOES OUT WHEN OVEN REACHES SET TEMPERATURE AND COMES ON WHEN OVEN IS HEATING UP.

IN THE EVENT OF POWER FAILURE, THE OVEN WILL NOT OPERATE.

PROGRAMMING MENUS:
See Operating/Programming Instruction Booklet for Programmable Oven Control with Bakers Pride Software for Cyclone Series Convection Ovens supplied with this option.

II. OPERATING INSTRUCTIONS

A. GENERAL INSTRUCTIONS:

(1) This equipment has an Electronic Temperature Control.
(2) Due to increased efficiency of this oven, the temperature of standard recipes may be reduced 50°F (30°C).
(3) Always load each shelf evenly. Space pans away from each other and from sides and back of oven to allow maximum air flow between them.
(4) Large tempered glass windows and interior lights allow a close check on the product making it unnecessary to frequently open the doors. Products cook faster in a convection oven as compared to a conventional oven. Depending on the product and the type of pans used, time saving may run from 20 percent to as high as 50 percent.

B. OPERATION SEQUENCE ROTARY CONTROL:

Cook only rotary control:
(1) Close the oven doors.
(2) Turn Selector Switch to “HI” or “LO” position. The indicator light near the Selector Switch will be illuminated.
(3) Turn the thermostat knob to the desired cooking temperature.
(4) Upon reaching the set temperature, the indicator light near the thermostat will go out.
(5) Load the oven with product to be cooked.
(6) Remove the product from the oven when done.

Timed cooking rotary control:
(1) Close the oven doors.
(2) Turn Selector Switch to “HI” or “LO” position. The indicator light near the Selector Switch will be illuminated.
(3) Turn the thermostat knob to the desired cooking temperature.
(4) Upon reaching the set temperature, the indicator light near the thermostat will go out.
(5) Load the oven with product to be cooked.
(6) Turn the timer knob to the desired bake time and timer will start counting down.

(7) When timer reaches zero, a buzzer will sound.
(8) Turn the timer knob to “O” position.
(9) Remove the product from the oven.

NOTE: TIMER DOES NOT CONTROL THE OVEN.

Cook and Hold Rotary Control:

(1) Close the oven doors.
(2) Turn Selector Switch to “HI” or “LO” position. The indicator light near the Selector Switch will be illuminated.
(3) Turn the thermostat knob to the desired cooking temperature.
(4) Upon reaching the set temperature, the indicator light near the thermostat will go out.
(5) Load the oven with product to be cooked.
(6) Turn the timer knob to the desired bake time and timer will start counting down.
(7) When timer reaches zero, a buzzer will sound.
(8) Turn the Timer knob to “O” position.
(9) Turn the thermostat knob to the desired hold temperature.
(10) Remove the product from the oven when done.

Optional steam injection Rotary control:

The solenoid valve for steam injection is mounted behind the service panel on the right-hand side of the unit. The electronic timer is preset at the factory. A ¼” copper tubing is provided on the Solenoid Valve for water hookup with a compression fitting. After the water hookup is made, make sure that there are no leaks. For steam injection, press the Steam switch momentarily.

NOTE: DO NOT USE STEAM INJECTION AT TEMPERATURES BELOW 275°F (135°C).

Oven cool down Rotary control:

To cool down the oven to a lower desired temperature, follow the steps detailed below.

(1) Open the oven doors.
(2) Turn Selector Switch to “oven cool down” position. Fan will now operate and cool down the oven.
(3) When the oven has cooled down to the desired temperature, turn the Selector Switch to “O” position. Close oven doors.

C. CLEANING: CLEAN ONLY WHEN OVEN IS COLD

SHOCK HAZARD
De-energize all power to equipment before cleaning the equipment.

WARNING
Never clean any electrical unit by immersing it in water. Turn unit off before cleaning surface.

(1) With porcelain enamel interiors, this oven is designed to be as maintenance free as possible. However, for best results, the oven should be cleaned regularly. Enameled interiors can be easily cleaned with oven cleaners. **KEEP CLEANING FLUIDS AWAY FROM ELECTRICAL WIRES, LIGHT SOCKETS, SWITCHES AND CONTROL PANEL.**
(2) Baked on splatter, oil, grease or discoloration on the stainless steel front or inside of the oven may be removed with stainless steel cleaner, or any other similar cleaning agent. **NOTE: ALWAYS RUB THE STAINLESS STEEL ALONG THE GRAINS.**
(3) To clean the blower wheel, remove and immerse in ammoniated water for 20 to 25 minutes. Then, scrub it off with a small, stiff brush. The same procedure can be followed for wire racks and rack supports. To remove the blower wheel, loosen the set screws (2) on the hub of the blower wheel and tighten the 3/8” wheel puller bolt (supplied) in center of hub (See Fig. 1).
(4) To clean wire shelves and rack supports, remove and immerse in ammoniated water for 20 - 25 minutes. Use a small stiff brush to remove any remaining dirt/debris (See Figure 2).

Figure 1 **Cleaning The Blower Wheel**

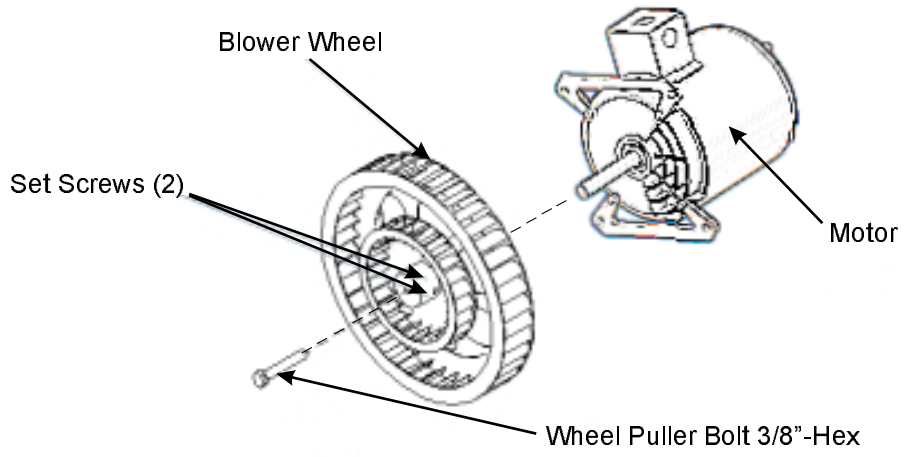

D. SERVICING:

NOTE: THIS APPLIANCE MUST BE SERVICED BY AN AUTHORIZED SERVICE AGENT.

(1) Power supply to the unit must be disconnected before any service is performed.
(2) Most of the service on the unit can be performed from the front and/or control panel side.
(3) For proper servicing, access to the control panel side of the unit will be required.
(4) It will be necessary to have access to the back of the oven for service needs related to the electric power supply.
(5) A system wiring diagram is provided in this manual and on the back of the service panel on the right side of the oven.
(6) All servicing should be performed by a factory-authorized technician only.
(7) For proper maintenance and repairs, call the factory toll free (800-431-2745) for an authorized service agency in your area.

CAUTION

This product, when stacked, has more than one power-supply connection point. Disconnect all power supplies before servicing.

WARNING-RISK OF FIRE

When stacked two high maximum, use stacking kit part # E3771A only.

Figure 2 **OPEN RACK STAND ASSEMBLY INSTRUCTIONS: BCO-E & GDCO-E**

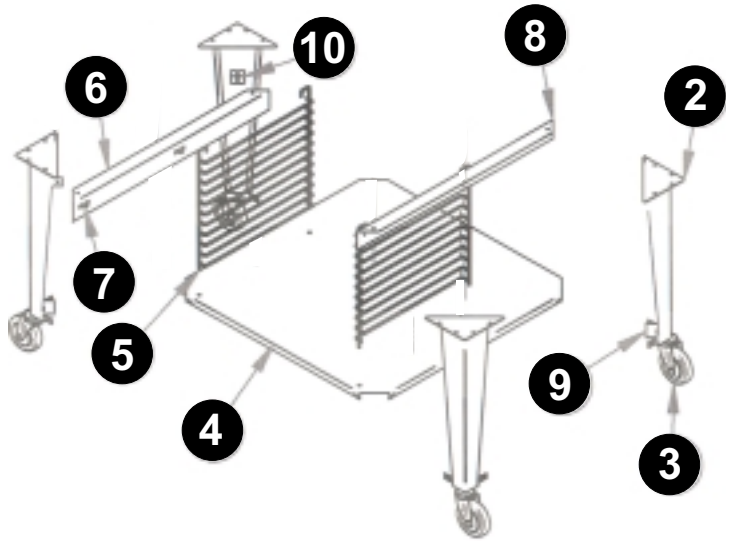

STEP 1) Attach 4 each Item 2 with 16 each 3/8 -16 bolts to the threaded holes located in the bottom of the oven or supplied with leg kit.

STEP 2) Place Item 4 between the legs and over Item 9 then attach Item 9 to Item 4 with 16 each 10-32 screws.

STEP 3) Attach Item 5 to Item 10 using 2 each ¼ -20 screws (Both sides)

STEP 4) Place Item 5 into Item 6 and into the holes in Item 4. (Both sides)

Figure 3 STACKING INSTRUCTIONS FOR: BCO-E & GDCO-E CONVECTION OVENS

Remove flue from top oven and replace with item 1

1

Attach part # 21818062 with 6 each 8-32 stainless screws

Remove flue from bottom oven, and re-install after top oven is in place.

2

Material: 14 ga 201 Stainless

3

Item 1	Item 2	Item 3
E3770A	E3771A	3/8”-16 Bolt

Figure 4 **LEG ASSEMBLY INSTRUCTIONS-MODEL: BCO-E & GDCO-E**

WITH PLATE CASTER

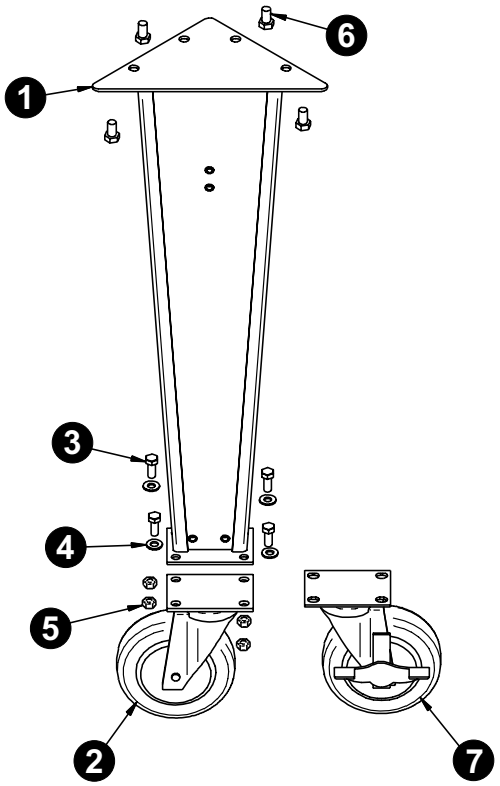

Item	P/N	Description
1	21818092	Leg, 25" SS Weldment Assy
2	8633102	Caster, 5” Swivel W/Top Plate
3	8227700	Hex Hd 5/16-18 X ¾ Bolt #5 Zn
4	8509300	Washer, Flat SAE, 5/16
5	8435000	Hex-nut 5/16-18
6	82447-00	Hex Hd. 3/8-16 X .750 #5
7	8633101	Caster, 5" Swivel W/Plate & Brake

1. Attach two item 2 to two item 1 using item 3, 4 and 5.
2. Attach two item 7 to two item 1 using item 3, 4 and 5.
3. Using proper lifting equipment attach item 1 to the 4 corresponding hole patterns located in the bottom of the oven with item 6.

WITHOUT PLATE CASTER

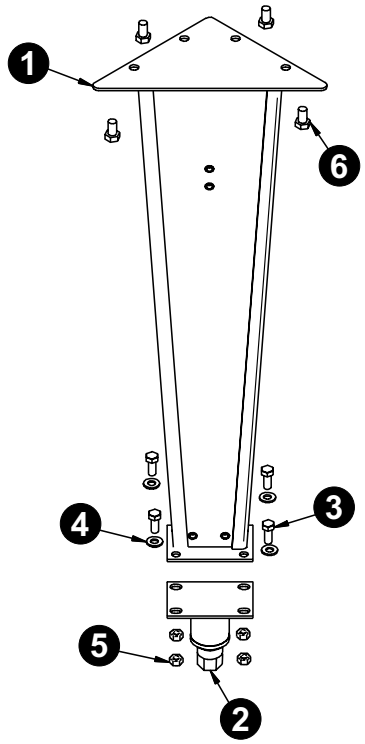

Item	P/N	Description
1	21818095	Leg, 25" Weldment Assy
2	8633515	Foot Insert, Adjustable
3	8227700	Hex Hd 5/16-18 X 3/4 Bolt #5 Zn
4	8509300	Washer, Flat, SAE, 5/16
5	8435000	Hex-Nut 5/16-18
6	82447-00	Hex Hd. 3/8-16 X .750 #5

1. Attach two item 2 to two item 1 using item 3, 4 and 5.
2. Using proper lifting equipment attach item 1 to the 4 corresponding hole patterns located in the bottom of the oven with item 6.

E. Wiring Diagrams:

Single Phase 208V or 240V Wiring Diagram (Dial Control)

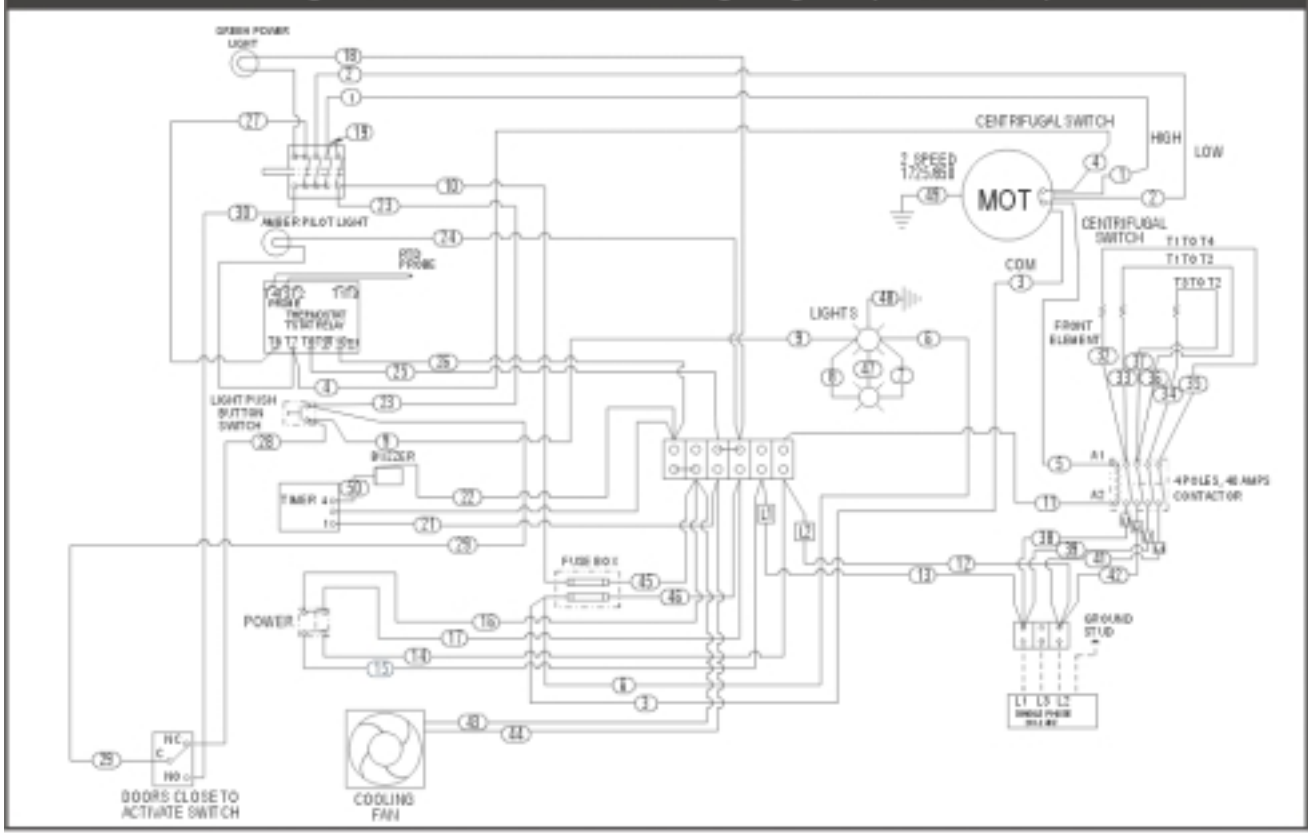

Three Phase 208V or 240V Wiring Diagram (Dial Control)

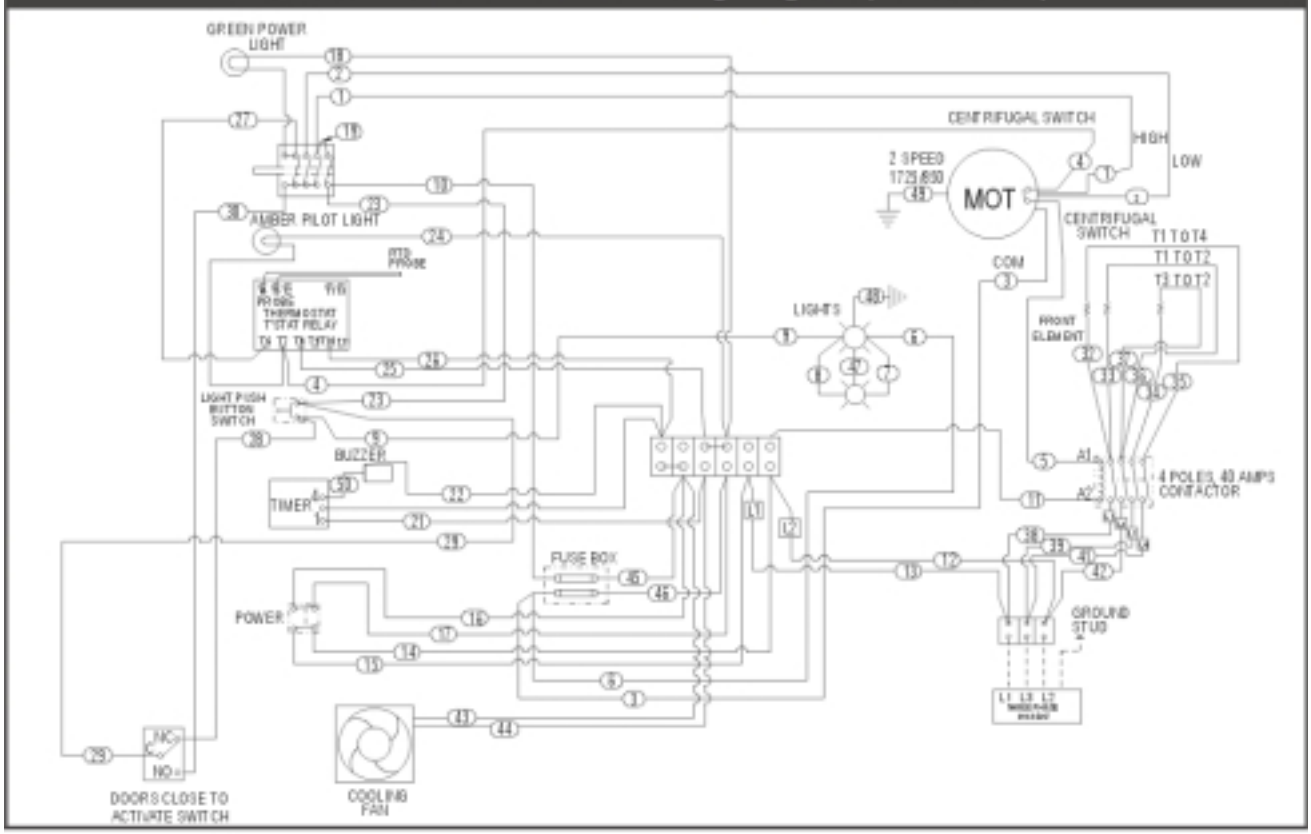

Single Phase 208V or 240V Wiring Diagram (CH-100 Control)

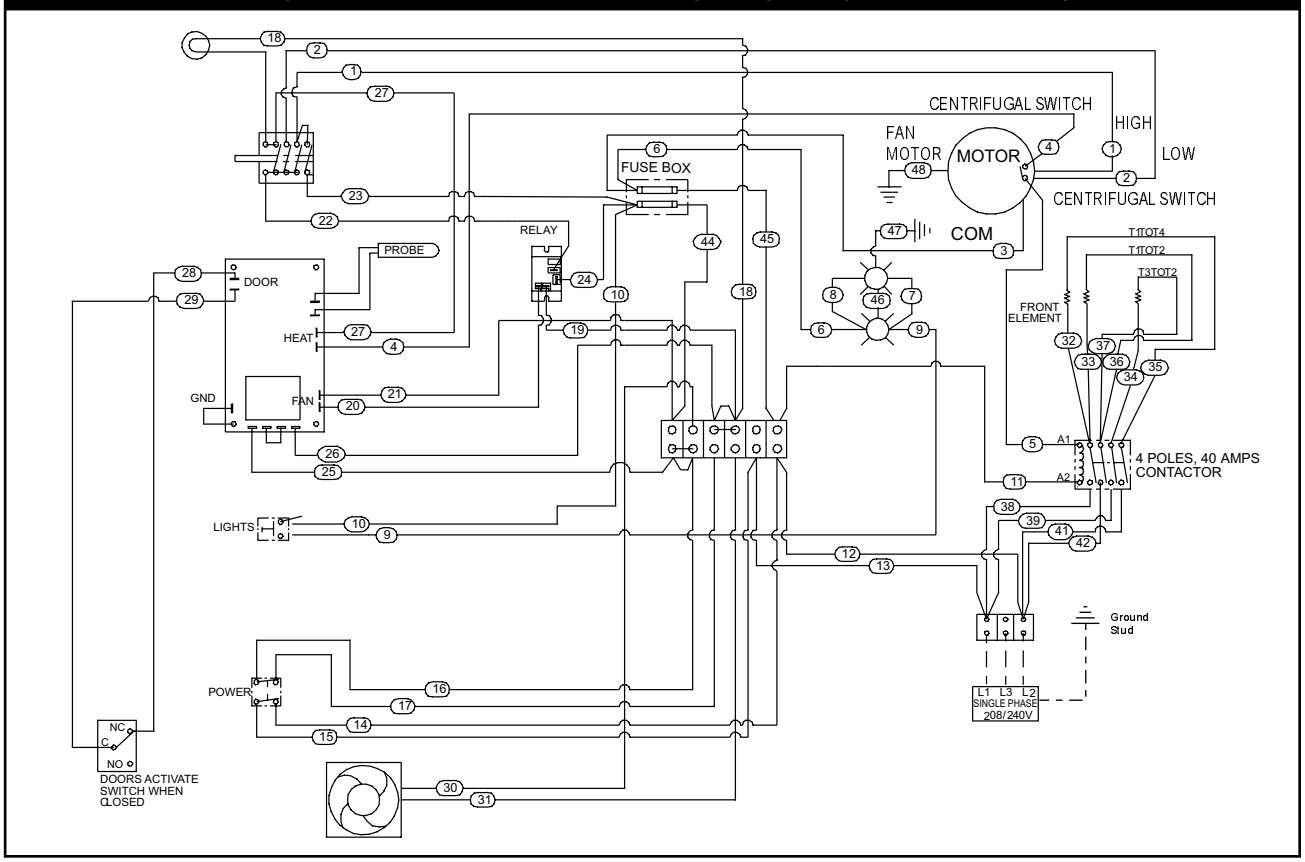

Three Phase 208V or 240V Wiring Diagram (CH-100 Control)

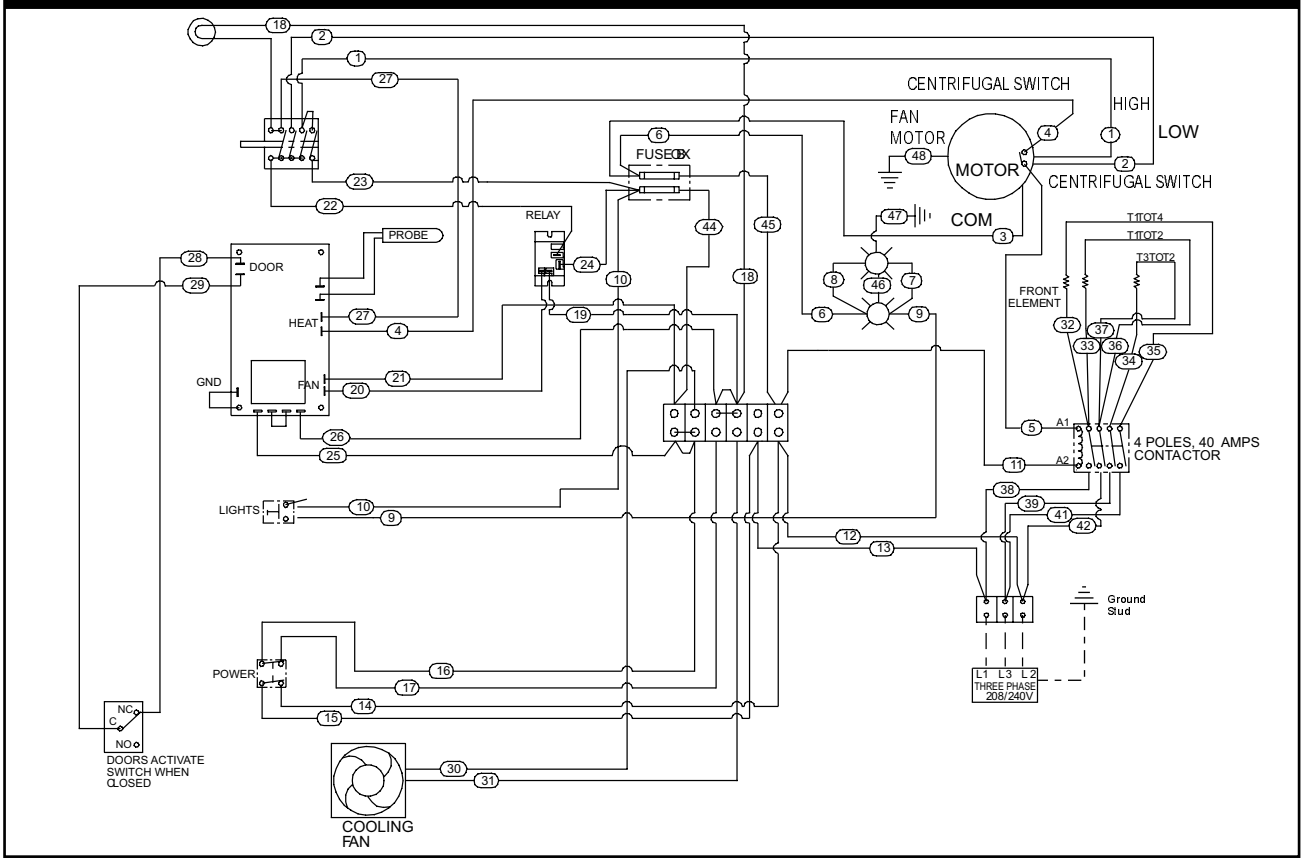

IMPORTANT FOR FUTURE REFERENCE

Please complete this information and retain this manual for the life of the equipment. For Warranty Service and/or Parts, this information is required.

Model Number	Serial Number	Date Purchased

Notes:

Notes:

BAKERS PRIDE LIMITED WARRANTY

30 Pine Street New Rochelle, New York 10801
914 / 576 - 0200 • US & Canada: 1 - 800 - 431 - 2745 • fax 914 / 576 - 0605

WHAT IS COVERED

This warranty covers defects in material and workmanship under normal use, and applies only to the original purchaser providing that:

- The equipment has not been accidentally or intentionally damaged, altered or misused;
- The equipment is properly installed, adjusted, operated and maintained in accordance with National and local codes, and in accordance with the installation instruction provided with the product;
- The serial number rating plate affixed to the equipment has not been defaced or removed.

WHO IS COVERED

This warranty is extended to the original purchaser and applies only to equipment purchased for use in the U.S.A.

COVERAGE PERIOD

Cyclone Convection Ovens: BCO Models: One (1) Year limited parts and labor; (1) Year limited door warranty.
GDCO Models: Two (2) Year limited parts and labor; (2) Year limited door warranty.
CO11 Models: Two (2) Year limited parts and labor; (5) Year limited door warranty.
All Other Products: One (1) Year limited parts and labor. Warranty period begins the date of dealer invoice to customer or ninety (90) days after shipment date from BAKERS PRIDE - whichever comes first.

WARRANTY COVERAGE

This warranty covers on-site labor, parts and reasonable travel time and travel expenses of the authorized service representative up to (100) miles, round trip, and (2) hours travel time. The purchaser, however, shall be responsible for all expenses related to travel, including time, mileage and shipping expenses on smaller counter models that may be carried into a Factory Authorized Service Center, including the following models: PX-14, PX-16, P18, P22S, P24S, PD-4, PDC, WS Series and BK-18.

EXCEPTIONS

All removable parts in BAKERS PRIDE Char-broilers, including but not limited to: Burners, Grates, Radiants, Stones and Valves, are covered for a period of SIX MONTHS.
All Ceramic Baking Decks are covered for a period of THREE MONTHS. The installation of these replacement decks is the responsibility of the purchaser.
The extended Cyclone door warranty years 3 through 5 is a parts only warranty and does not include labor, travel, milage or any other charges.

EXCLUSIONS

- Negligence or acts of God,
- Thermostat calibrations after (30) days from equipment installation date,
- Air and Gas adjustments,
- Light bulbs,
- Glass doors and door adjustments,
- Fuses,
- Char-broiler work decks and cutting boards,
- Tightening of conveyor chains,
- Adjustments to burner flames and cleaning of pilot burners,
- Tightening of screws or fasteners,
- Failures caused by erratic voltages or gas supplies,
- Unauthorized repair by anyone other than a BAKERS PRIDE Factory Authorized Service Center,
- Damage in shipment,
- Alteration, misuse or improper installation,
- Thermostats and safety valves with broken capillary tubes,
- Accessories — spatulas, forks, steak turners, grate lifters, oven brushes, scrapers, peels, etc.,
- Freight — other than normal UPS charges,
- Ordinary wear and tear.

INSTALLATION

Leveling and installation of decks, as well as proper installation and check out of all new equipment — per appropriate installation and use materials — is the responsibility of the dealer or installer, not the manufacturer.

REPLACEMENT PARTS

BAKERS PRIDE genuine Factory OEM parts receive a (90) day materials warranty effective from the date of installation by a BAKERS PRIDE Factory Authorized Service Center.

This Warranty is in lieu of all other warranties, expressed or implied, and all other obligations or liabilities on the manufacturers part. BAKERS PRIDE shall in no event be liable for any special, indirect or consequential damages, or in any event for damages in excess of the purchase price of the unit. The repair or replacement of proven defective parts shall constitute a fulfillment of all obligations under the terms of this warranty.

Form #U4177A 3/04

BAKERS PRIDE OVEN CO., INC.
30 Pine Street
New Rochelle, NY 10801

+1 (800) 431-2745 US & Canada
+1 (914) 576-0200 Phone
+1 (914) 576-0605 Fax

sales@bakerspride.com E-Mail
www.bakerspride.com Web Address