Heated Display Merchandiser

MODELS TW-2, TW-3, TW-2D, TW-3D

Service Manual

Serial Numbers 123177 and Higher

Warranty Information

LIMITED ONE YEAR WARRANTY

BKI (The "Company") warrants to the original purchaser that at time of shipment from the Company factory, this equipment will be free from defect in materials and workmanship. Written notice of a claim under this warranty must be received by the Company within ONE YEAR from the date of installation, but no longer than ONE YEAR AND THREE MONTHS from date of shipment from the factory. Defective conditions caused by abnormal use or misuse, lack of or improper maintenance, damage by third parties, alterations by unauthorized personnel, acts of God, failure to follow installation and/or operating instructions, or any other events beyond the reasonable control of the Company will NOT be covered under this warranty. The obligation of the Company under this warranty shall be limited to repairing or replacing (at the option of the Company) any part, with the exception of lamps, fuses, and glass (which are not covered under warranty), which is found defective in the reasonable opinion of the Company. Any part found defective by the Company will be repaired or replaced without charge F.O.B. factory, Simpsonville, South Carolina or F.O.B. authorized BKI Distributor. The Company and/or its authorized representatives will assume the normal replacement labor expense for the defective part for the period of the warranty as stated above, excluding travel and/or other expenses incidental to the replacement of the defective part, where replacement work is performed during standard business hours and not subject to overtime, holiday rates, and/or any additional fees. IN NO EVENT SHALL THE COMPANY BE LIABLE FOR LOSS OF USE, LOSS OF REVENUE OR LOSS OF PRODUCT OR PROFIT OR FOR INDIRECT OR CONSEQUENTIAL DAMAGES INCLUDING BUT NOT LIMITED TO, FOOD SPOILAGE OR PRODUCT LOSS. WARRANTY DOES NOT COVER GLASS BREAKAGE. THE ABOVE WARRANTY IS EXCLUSIVE AND ALL OTHER WARRANTIES, EXPRESS OR IMPLIED, ARE EXCLUDED INCLUDING THE IMPLIED WARRANTIES OF MERCHANTABILITY AND FITNESS FOR A PARTICULAR PURPOSE.

REPLACEMENT PARTS

Any appliance replacement part, with the exception of lamps, fuses, and glass, which proves to be defective in material or workmanship within ninety (90) days of installation will be replaced without charge F.O.B. Factory, Simpsonville, SC or F.O.B. authorized BKI Distributor. The user shall have the responsibility and expense of removing and returning the defective part to the Company as well as the cost of reinstalling the replacement or repaired part.

Table of Contents

Table of Contents **1**
Introduction **2**
Safety Precautions 2
Safety Signs and Messages 2
Safe Work Practices 3
Safety Labels 4
Installation **5**
Instructions For Shipping Damage 5
Electrical Information 5
Replacement Parts **6**
TW-2 6
TW-2D 8
TW-3 10
TW-3D 12
Wiring Diagrams **14**
Notes **20**

Introduction

Congratulations! You have chosen a **Heated Display Merchandiser** that will give you many years of fine service from the original manufacturer, **BKI.**

The BKI name and trademark on this unit assures you of the finest in design and engineering -- that it has been built with care and dedication -- using the best materials available. Attention to the operating instructions regarding proper installation, operation, and maintenance will result in long lasting dependability to insure the highest profitable return on your investment.

NOTICE PLEASE READ THIS ENTIRE MANUAL BEFORE OPERATING THE UNIT. If you have any questions, please contact your BKI Distributor. If they are unable to answer your questions, contact the BKI Technical Service Department, toll free: 1-800-927-6887. Outside the U.S., call 1-864-963-3471.

Safety Precautions

Always follow recommended safety precautions listed in this manual. Below is the safety alert symbol. When you see this symbol on your equipment, be alert to the potential for personal injury or property damage.

Safety Signs and Messages

The following Safety signs and messages are placed in this manual to provide instructions and identify specific areas where potential hazards exist and special precautions should be taken. Know and understand the meaning of these instructions, signs, and messages. Damage to the equipment, death or serious injury to you or other persons may result if these messages are not followed.

⚠DANGER This message indicates an imminently hazardous situation which, if not avoided, will result in death or serious injury.

⚠WARNING This message indicates a potentially hazardous situation, which, if not avoided, could result in death or serious injury.

⚠CAUTION This message indicates a potentially hazardous situation, which, if not avoided, may result in minor or moderate injury. It may also be used to alert against unsafe practices.

NOTICE This message is used when special information, instructions or identification are required relating to procedures, equipment, tools, capacities and other special data.

Safe Work Practices

Beware of High Voltage
This equipment uses high voltage. Serious injury can occur if you or any untrained or unauthorized person installs, services, or repairs this equipment. Always Use an Authorized Service agent to Service Your Equipment.

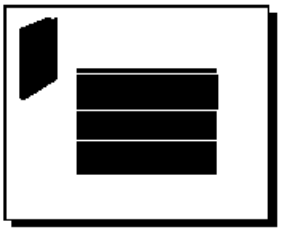

Keep this manual with the Equipment
This manual is an important part of your equipment. Always keep it near for easy access. If you need to replace this manual, contact:

BKI
Technical Services Department
P.O. Box 80400
Simpsonville, S.C. 29680-0400
Or call toll free: 1-800-927-6887
Outside the U.S., call 864-963-3471

Protect Children
Keep children away from this equipment. Children may not understand that this equipment is dangerous for them and others.

NEVER allow children to play near or operate your equipment.

Keep Safety Labels Clean and in Good Condition
Do not remove or cover any safety labels on your equipment. Keep all safety labels clean and in good condition. Replace any damaged or missing safety labels. Refer to the Safety Labels section for illustration and location of safety labels on this unit. If you need a new safety label, obtain the number of the specific label illustrated on page 4, then contact:

BKI
Technical Services Department
P.O. Box 80400
Simpsonville, S.C. 29680-0400
Or call toll free: 1-800-927-6887
Outside the U.S., call 864-963-3471

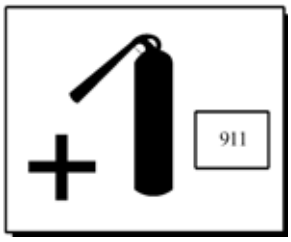

Be Prepared for Emergencies
Be prepared for fires, injuries, or other emergencies.

Keep a first aid kit and a fire extinguisher near the equipment. You must use a 40-pound Type BC fire extinguisher and keep it within 25 feet of your equipment.

Keep emergency numbers for doctors, ambulance services, hospitals, and the fire department near your telephone.

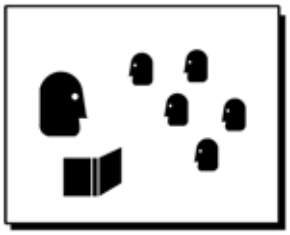

Know your responsibilities as an Employer

- Make certain your employees know how to operate the equipment.
- Make certain your employees are aware of the safety precautions on the equipment and in this manual.
- Make certain that you have thoroughly trained your employees about operating the equipment safely.
- Make certain the equipment is in proper working condition. If you make unauthorized modifications to the equipment, you will reduce the function and safety of the equipment.

Safety Labels

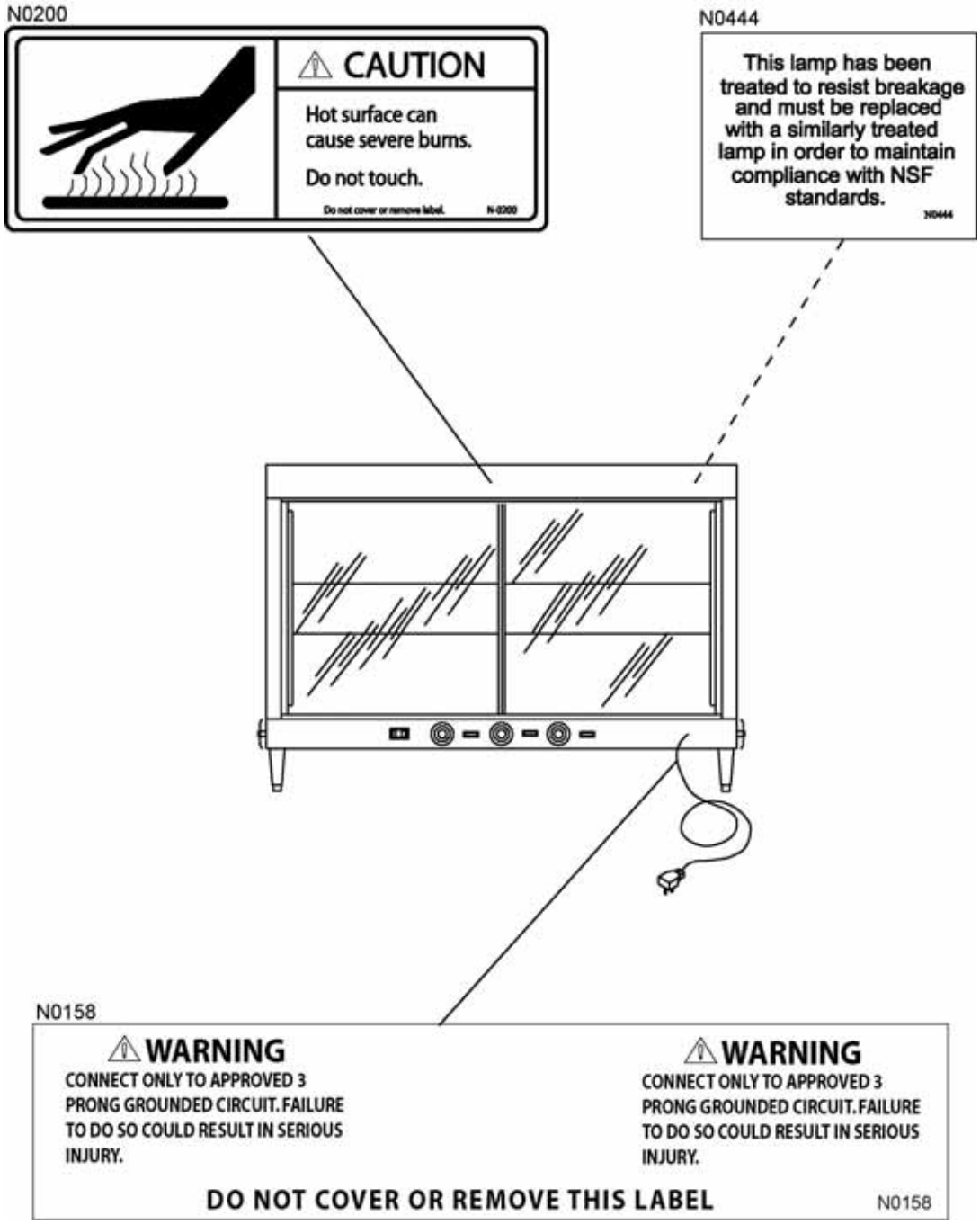

Installation

WARNING Serious injury, equipment damage or death could result if attempting to install this unit yourself. Ensure that an authorized BKI service agent installs the unit.

Instructions For Shipping Damage

You are responsible for filing all freight claims with the delivering truck line. Inspect all cartons and crates for damage when they arrive. If there is damage noted to shipping crates or cartons, or, if a shortage is found, note this on the bill of lading (all copies) before signing.

If damage is detected when the equipment is uncrated, immediately call the delivering truck line and follow up the call with a written report indicating concealed damage to your equipment. Ask for an immediate inspection of your concealed damage item. Crating material MUST be retained to show the inspector from the truck line.

Electrical Information

WARNING Electrocution, equipment failure or property damage could result if an unlicensed electrician performs the electrical installation. Ensure that a licensed electrician perform the electrical installation in accordance with local codes, or in the absence of local codes, with the National Electrical Code, ANSI NFPA 70-20XX.

This unit, when installed by an authorized BKI service agent, must be wired for use in accordance with all applicable local, state, and federal codes. For specific electrical requirements and connections refer to the wiring diagram attached to the unit or provided in the Service Manual.

Replacement Parts

Use the information in this section to identify replacement parts. To order replacement parts, call your local BKI sales and service representative. Before calling, please note the serial number on the rating tag affixed to the unit.

TW-2

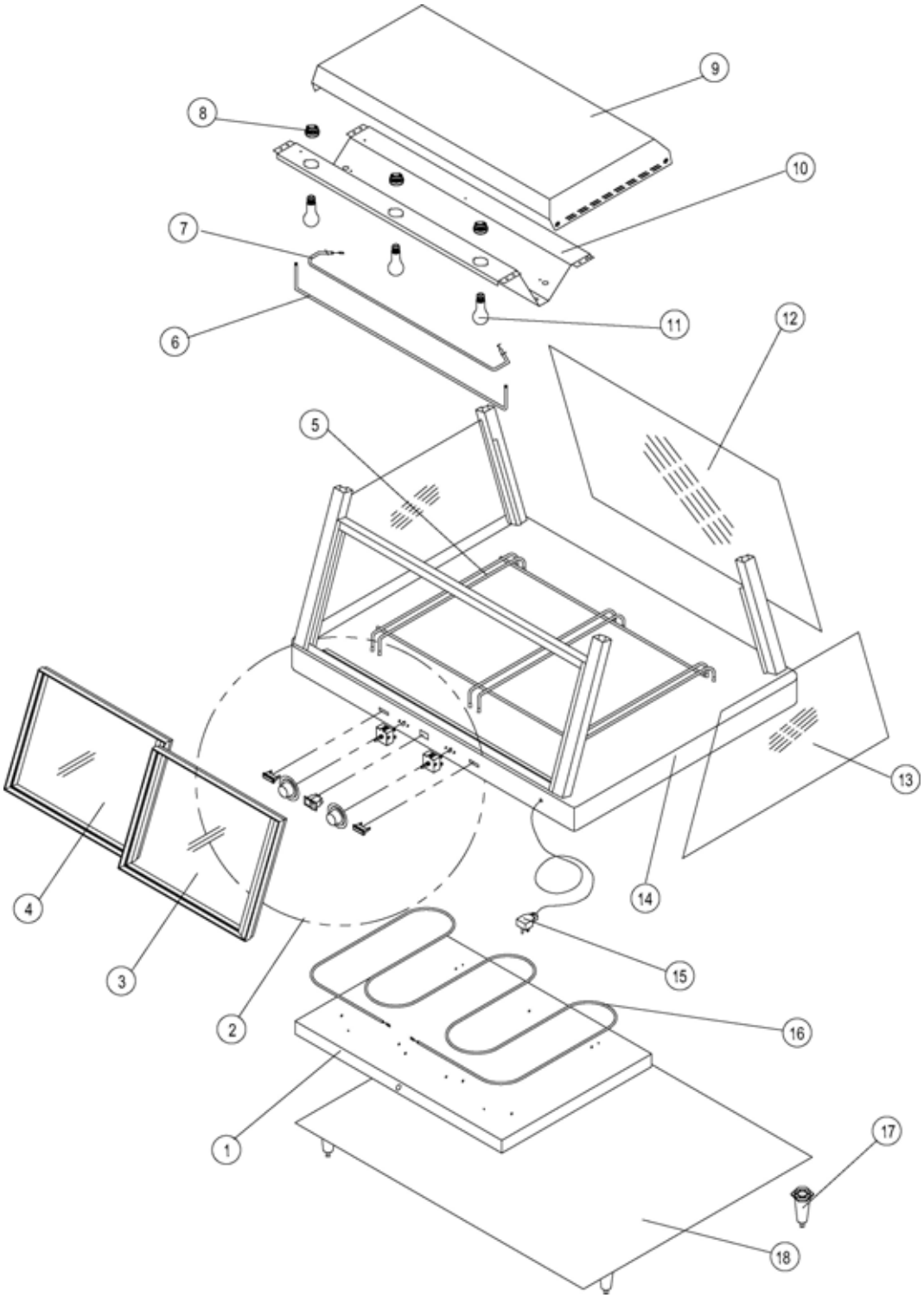

ITEM #	PART #	QTY	DESCRIPTION
1	TWA023	1	CALROD PAN TW-2
2			CONTROL PANEL TW-2
	K0035	2	KNOB, LOW 1-6 HI Z-34620-1220
	PL0005	2	PILOT LIGHT, 125V
	S0102	1	SWITCH, RCKR SPST W/LITE 250V
	S0029	2	SWITCH, INFINITE 120V-1246
3	D0318	1*or 2**	DOOR, LR TW-2 STRETCHED
4	D0319	1* or 2**	DOOR, RF TW-2 STRETCHED
5	R0062	1	RACK, 20 3/8 X 28 3/4
6	TWA043	1	PROTECTOR ROD, TW-2, 2D
7	C0267B	1	CALROD, 120V 480W W/2 TWA026 BRKTS
8	LH0001	3	LAMPHOLDER, RD PORCELAIN
9	WTWA059	1	HOOD WELD, TW2/2D STRETCHED
10	TWA060	1	LIGHT INSERT, TW/D2 STRETCHED
11	B0066	3	BULB, 40A15 130V TEFLON COATED
12	GL0157*	1	GLASS, 16 7/16 X 29 5/8 3/16
13	GL0132	2	GLASS, 15 X 13 X 22 7/16
14	WTWA061	1	BASE, TW-2 STRETCHED WELDED
15	CS0005	1	CORD SET, 115V 7'6"
16	C0243	1	CALROD, 120V 600W U1-32-414-2
17	L0041	4	LEG, BLACK HEX FOOT
18	TWA056	1	BASE PLATE, TW/D2 STRETCHED

** - Used in unit with Solid Front Glass option.*
*** - Used in unit with Front Glass Doors option.*

TW-2D

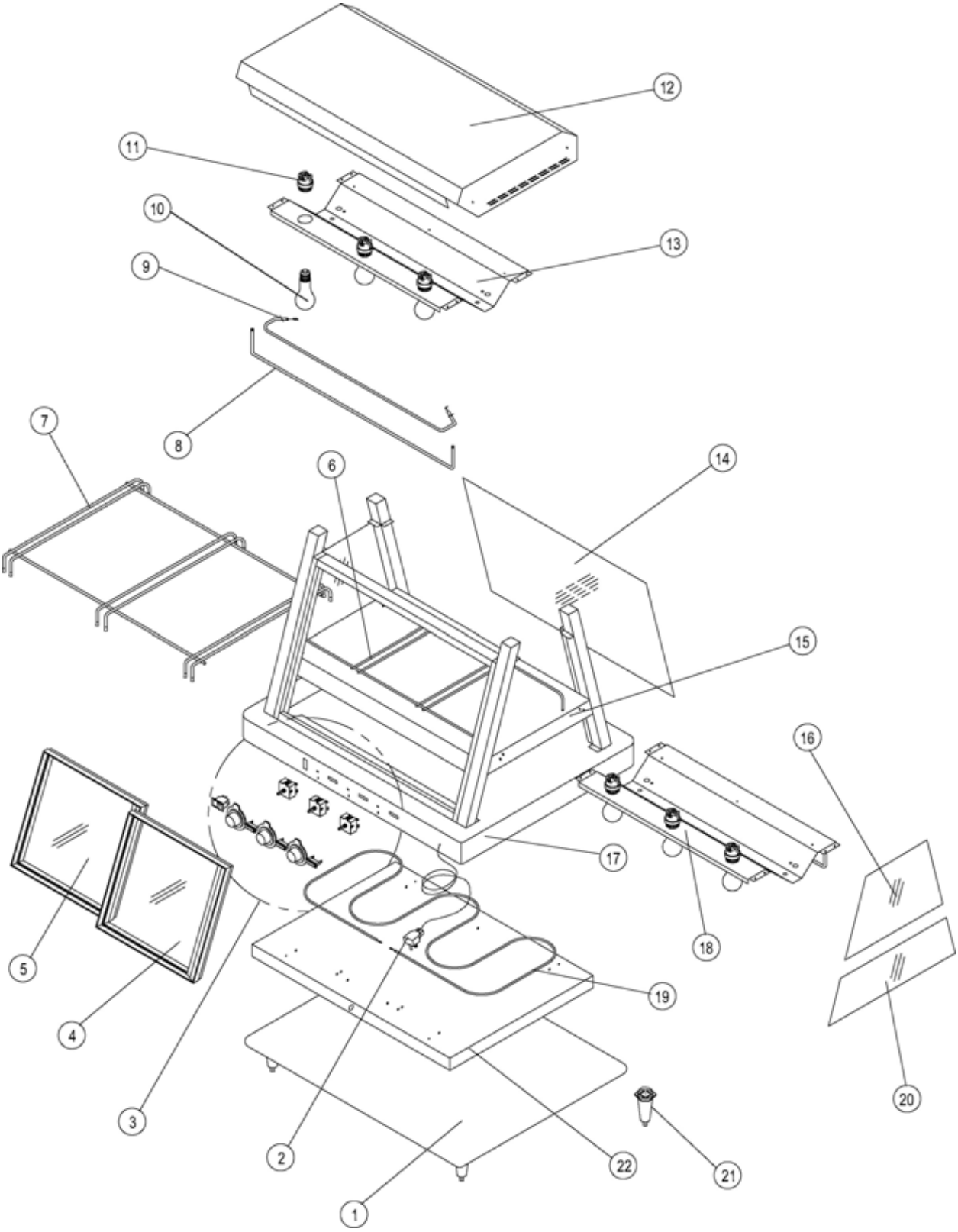

ITEM #	PART #	QTY	DESCRIPTION
1	TWA018	1	BASE PLATE TW-2
2	CS0005	1	CORD SET, 115V 7'6"
3			CONTROL PANEL TW-2D
	K0035	3	KNOB, LOW 1-6 HI Z-34620-1220
	PL0005	3	PILOT LIGHT, 125V
	S0102	1	SWITCH, RCKR SPST W/LITE 250V
	S0029	3	SWITCH, INFINITE 120V-1246
4	D0263	1* or 2**	DOOR, RIGHT FRONT TW2D
5	D0264	1* or 2**	DOOR, LEFT REAR TW2D
6	R0069	1	RACK, MIDDLE DECK PAN TW-2D
7	R0062	1	RACK, 20 3/8 X 28 3/4
8	TWA043	1	PROTECTOR ROD, TW-2, 2D
9	C0267B	1	CALROD, 120V 480W W/2 TWA026 BRKTS
10	B0066	6	BULB, 40A15 130V TEFLON COATED
11	LH0001	3	LAMPHOLDER, RD PORCELAIN
12	WTWA019	1	HOOD WELD, TW-2
13	TWA017	1	INSERT TW-2
14	GL0160*	1	GLASS, 20 7/8 X 29 5/8 3/16
15	TWDA043	1	MIDDLE DECK TWD-2 W/GUARDS
16	GL0133	2	GLASS, 8 1/4 X 16 31/32 X 3/16
17	WTWDA041	1	TWD-2 BASE CORNERS WELDED
18	SB5052	1	INSERT ASSY, 120V TW2D
19	C0243	1	CALROD, 120V 600W U1-32-414-2
20	GL0134	2	GLASS, 8 1/4 X 22 3/8X 18 9/16
21	L0041	4	LEG, BLACK HEX FOOT
22	TWA023	1	CALROD PAN TW-2

** - Used in unit with Solid Front Glass option.*
*** - Used in unit with Front Glass Doors option.*

TW-3

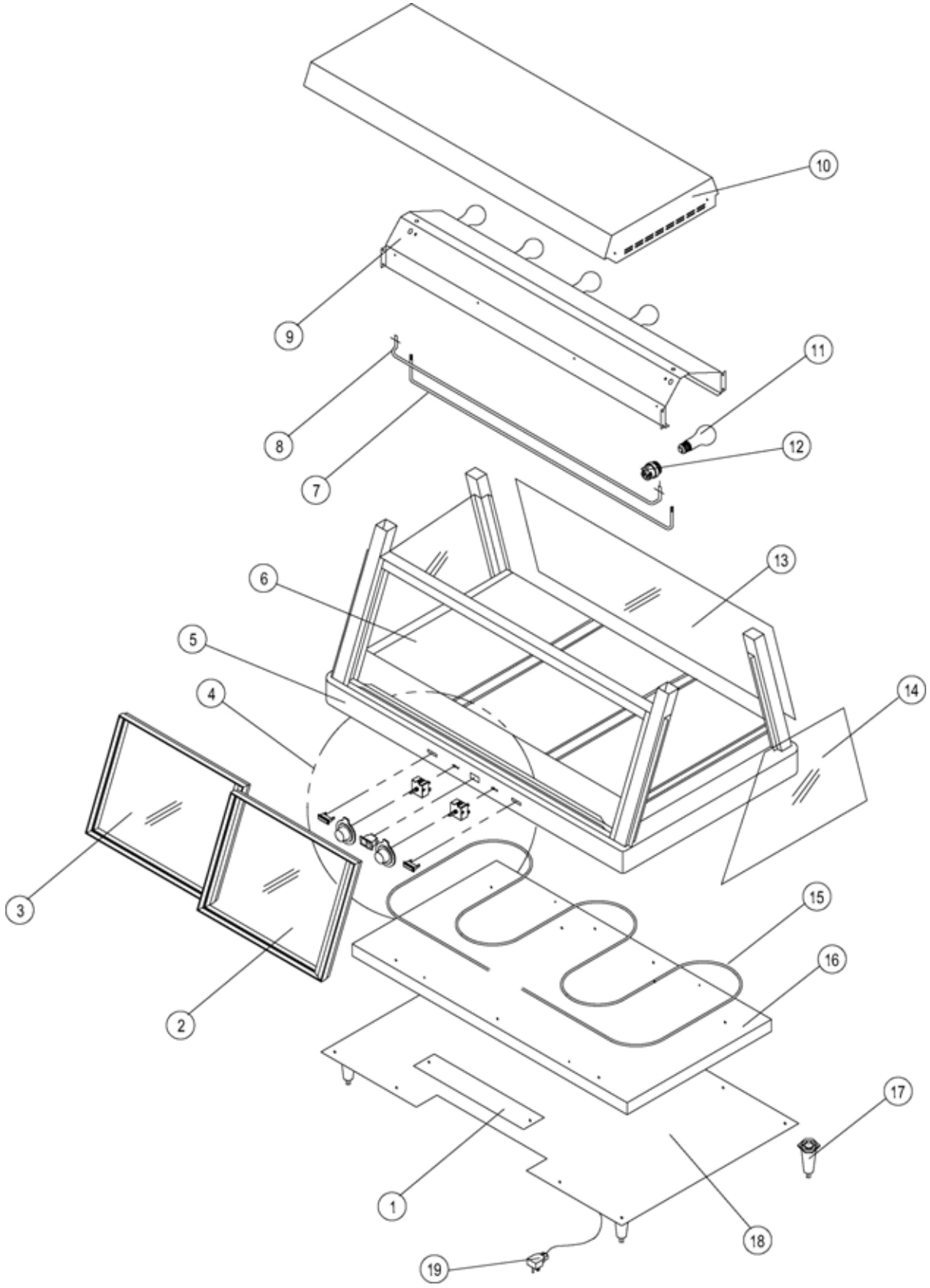

ITEM #	PART #	QTY	DESCRIPTION
1	TWA055	1	ADAPTER PLATE FOR CORD, TW3'S
2	D0259	1* or 2*	DOOR, RH W/BUMPER TW-3
3	D0260	1* or 2*	DOOR, LH TW-3
4			CONTROL PANEL TW-3
	K0035	2	KNOB, LOW 1-6 HI Z-34620-1220
	S0102 or S0103	1	SWITCH, RCKR SPST W/LITE 250V or SWITCH, RKR DPST 15A 250V LAMP
	S0029 or S0141	2	SWITCH, INFINITE 120V-1246 or SWITCH, INFINITE 240V-1245
	PL0003 or PL0005	2	PILOT LIGHT, 250V RECT BLK BEZEL or PILOT LIGHT, 125V
5	WTWA007	1	BASE, TW-3 CORNERS WELDED
6	WTWDA055	1	BOTTOM PAN INSERT CORNER WELD
7	TWA044	1	PROTECTOR ROD, TW-3 3D
8	C0268B or C0302	1	CALROD, 120V 640W or CALROD, 240V 640W
9	TWA004	1	INSERT, TW-3
10	WTWA006	1	HOOD WELD, TW-3
11	B0066 or B0553	5	BULB, 40A15 130V TEFLON COATED or BULB, TUFFSKIN 40W 250V
12	LH0001	5	LAMPHOLDER, RD PORCELAIN
13	GL0158	1*	GLASS, 16 7/16 X 40 5/8 3/16
14	GL0132	2	GLASS, 15 X 13 X 22 7/16
15	C0301	1	CALROD, 230V 800W
16	TWA002	1	CALROD PAN, TW-3
17	L0041	4	LEG, BLACK HEX FOOT
18	TWA005	1	BASE PLATE, TW-3
19	CS0005 or CS0023	1	CORD SET, 115V 7'6" or CORD SET, 250V 6' 12/3 SO

** - Used in unit with Solid Front Glass option.*
*** - Used in unit with Front Glass Doors option.*

TW-3D

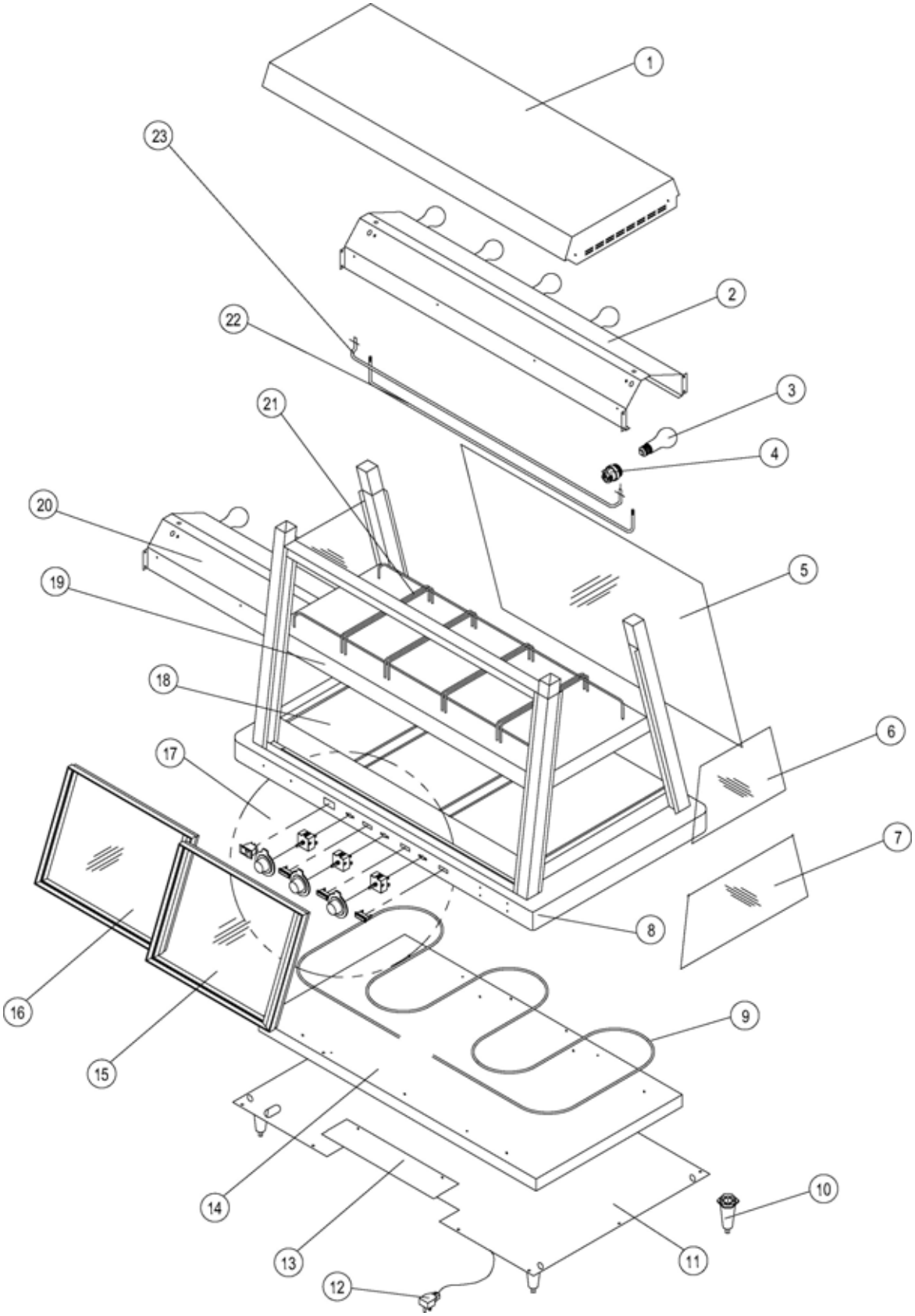

ITEM #	PART #	QTY	DESCRIPTION
1	WTWA006	1	HOOD WELD, TW-3
2	TWA004	1	INSERT, TW-3
3	B0066	10	BULB, 40A15 130V TEFLON COATED
4	LH0001	5	LAMPHOLDER, RD PORCELAIN
5	GL0159	1*	GLASS, 20 7/8 X 40 5/8 3/16
6	GL0133	2	GLASS, 8 1/4 X 16 31/32 X 3/16
7	GL0134	2	GLASS, 8 1/4 X 22 3/8X 18 9/16
8	WTWDA003	1	BASE WELDED TW3D
9	C0242	1	CALROD, 120V 800W U1-32-414-3
10	L0041	4	LEG, BLACK HEX FOOT
11	TWDA002	1	BASE PLATE, TW-3D
12	SB4752	1	CORD SET ASSY, 120V TW3D
13	TWA003	1	ACCESS PLATE, TW
14	TWA002	1	CALROD PAN, TW-3
15	D0266	1* or 2**	DOOR, LH TW-3D
16	D0265	1* or 2**	DOOR, RH TW-3D
17			CONTROL PANEL
	K0035	3	KNOB, LOW 1-6 HI Z-34620-1220
	S0029	3	SWITCH, INFINITE 120V-1246
	S0102	1	SWITCH, RCKR SPST W/LITE 250V
	PL0005	3	PILOT LIGHT, 125V
18	WTWDA055	1	BOTTOM PAN INSERT CORNER WELD
19	TWDA001	1	MIDDLE DECK TW3D
20	SB4759	1	INSERT ASSY 120V TW3D
21	R0070	1	RACK, MIDDLE DECK PAN TW-3D
22	TWA044	1	PROTECTOR ROD, TW-3 3D
23	C0268B	1	CALROD, 120V 640W

** - Used in unit with Solid Front Glass option.*
*** - Used in unit with Front Glass Doors option.*

Wiring Diagrams

Refer to the table below to find the wiring diagram associated with your unit.

WIRING DIAGRAM	DRAWING #	FIGURE #
TW-2 220V-240V/50hz	TWE1004	Figure 1
TW-2D 220V-240V/50hz	TWDE1005	Figure 2
TW-3 220V/240V	TWE1005	Figure 3
TW-3D 220V-240V/50hz	TWDE1004	Figure 4
TW-3D 220V	TWDE1006	Figure 5

Figure 1. *TW-2 220V-240V/50hz*

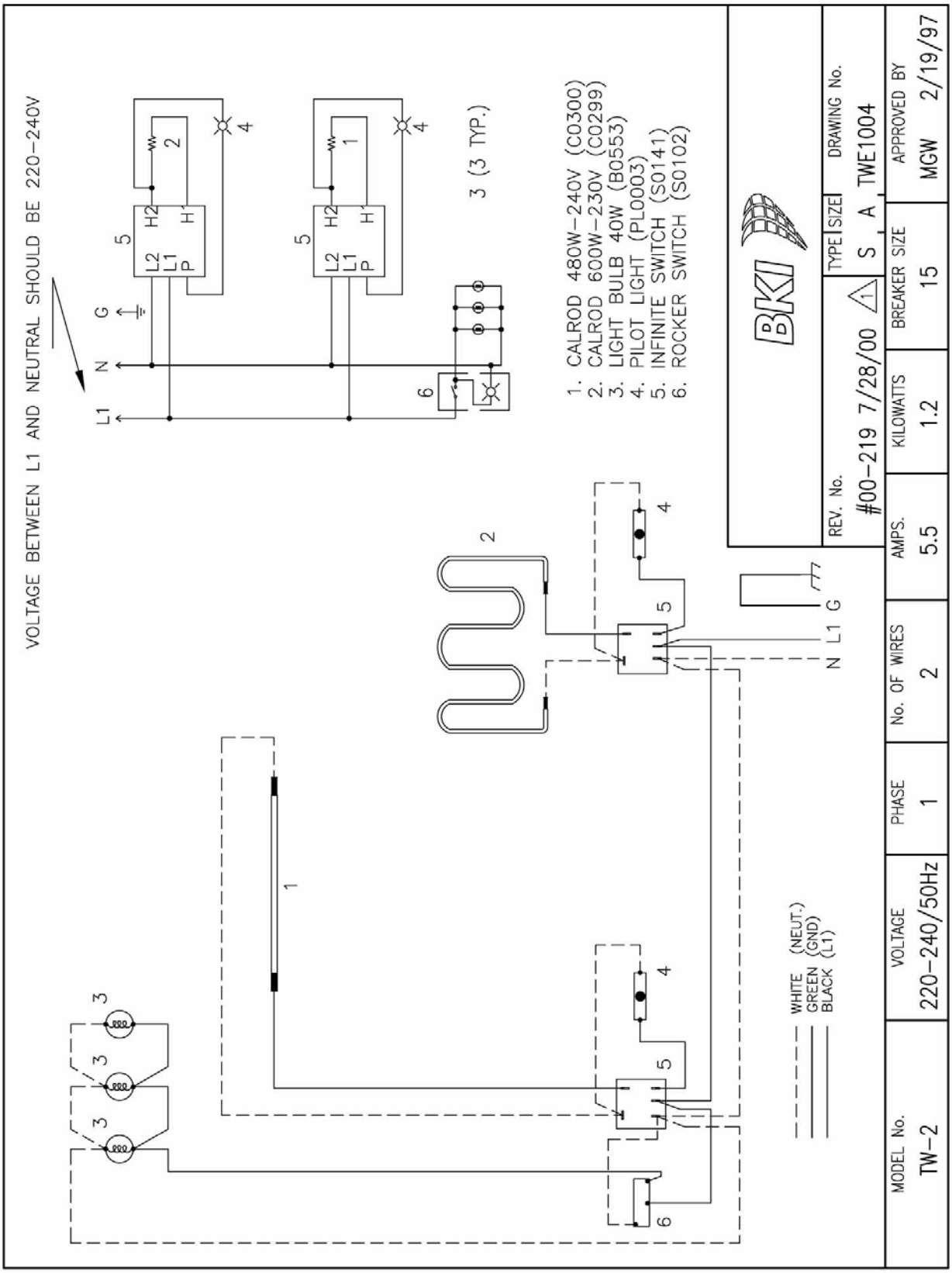

Figure 2. *TW-2D 220V-240V/50hz*

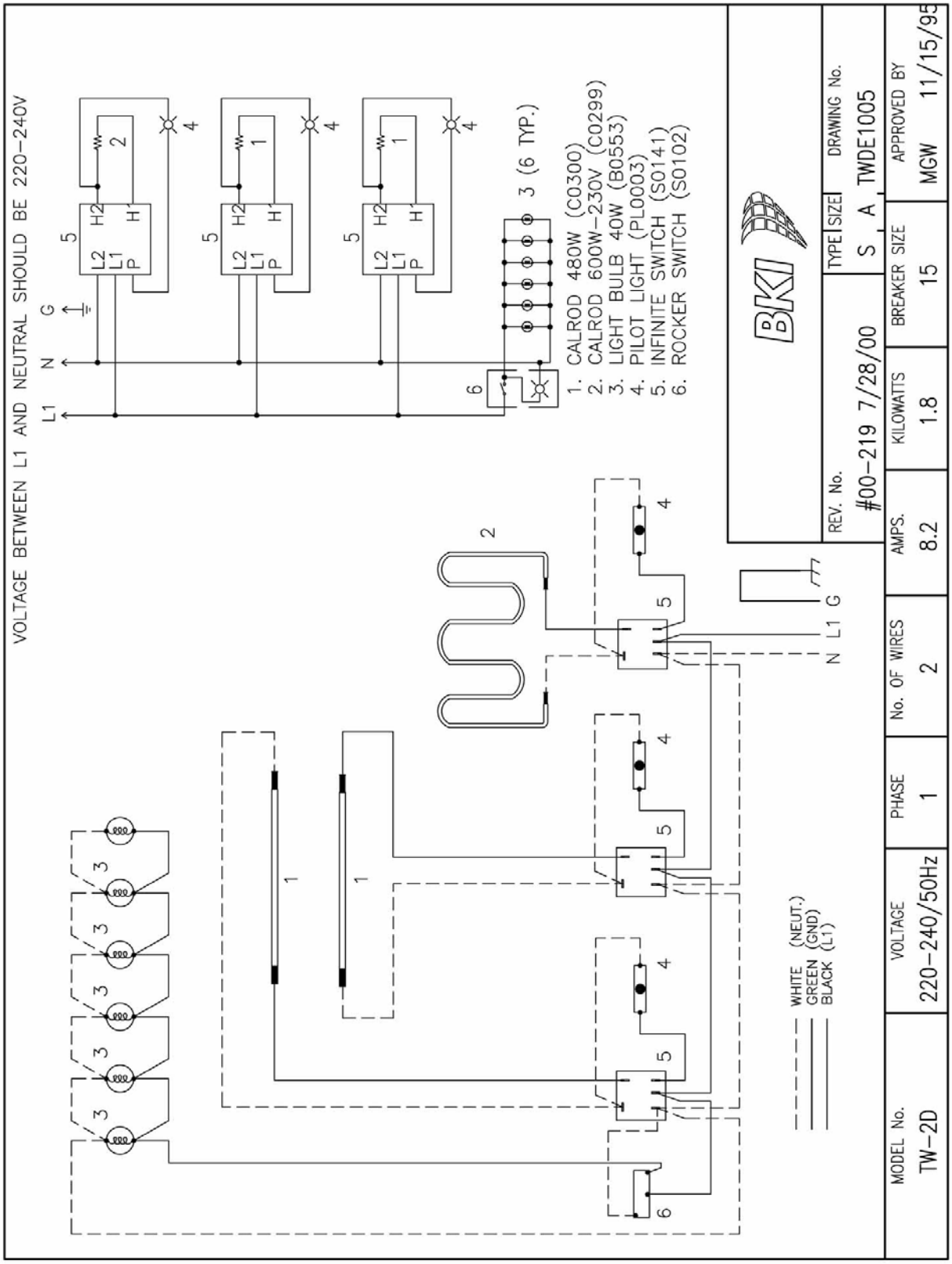

Figure 3. *TW-3 220V/240V*

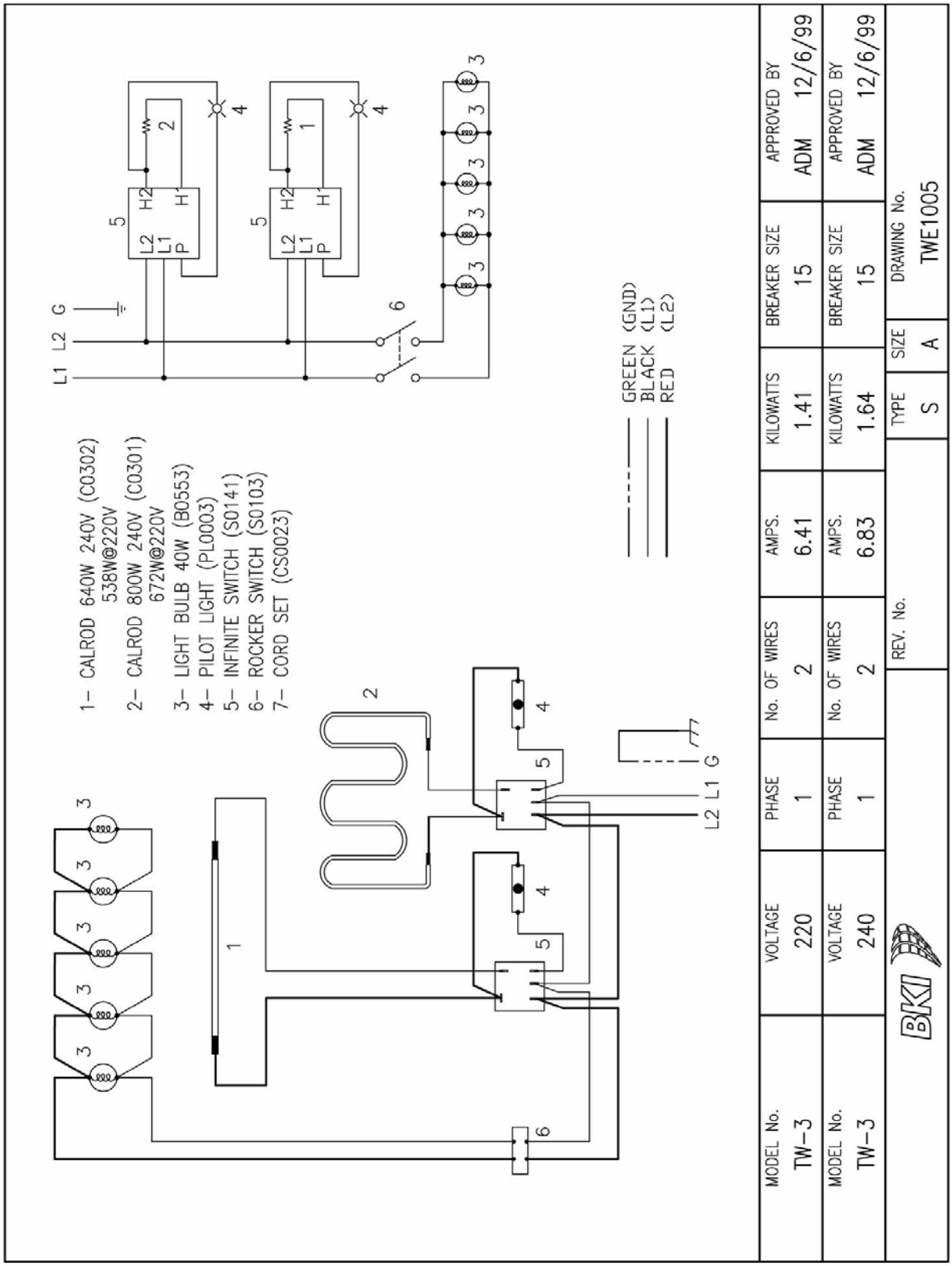

Figure 4. *TW-3D 220V-240V/50hz*

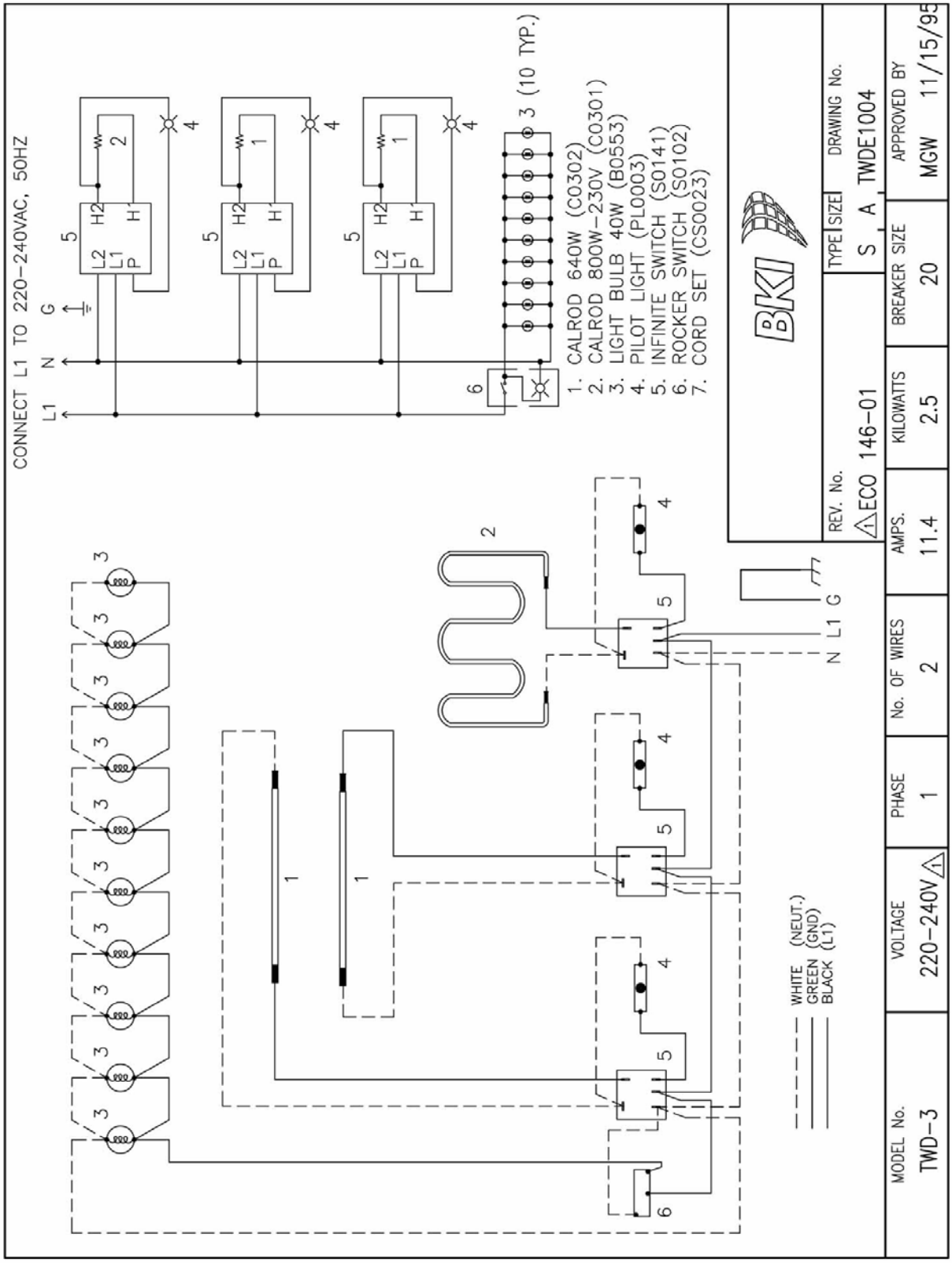

Figure 5. *TW-3D 220V*

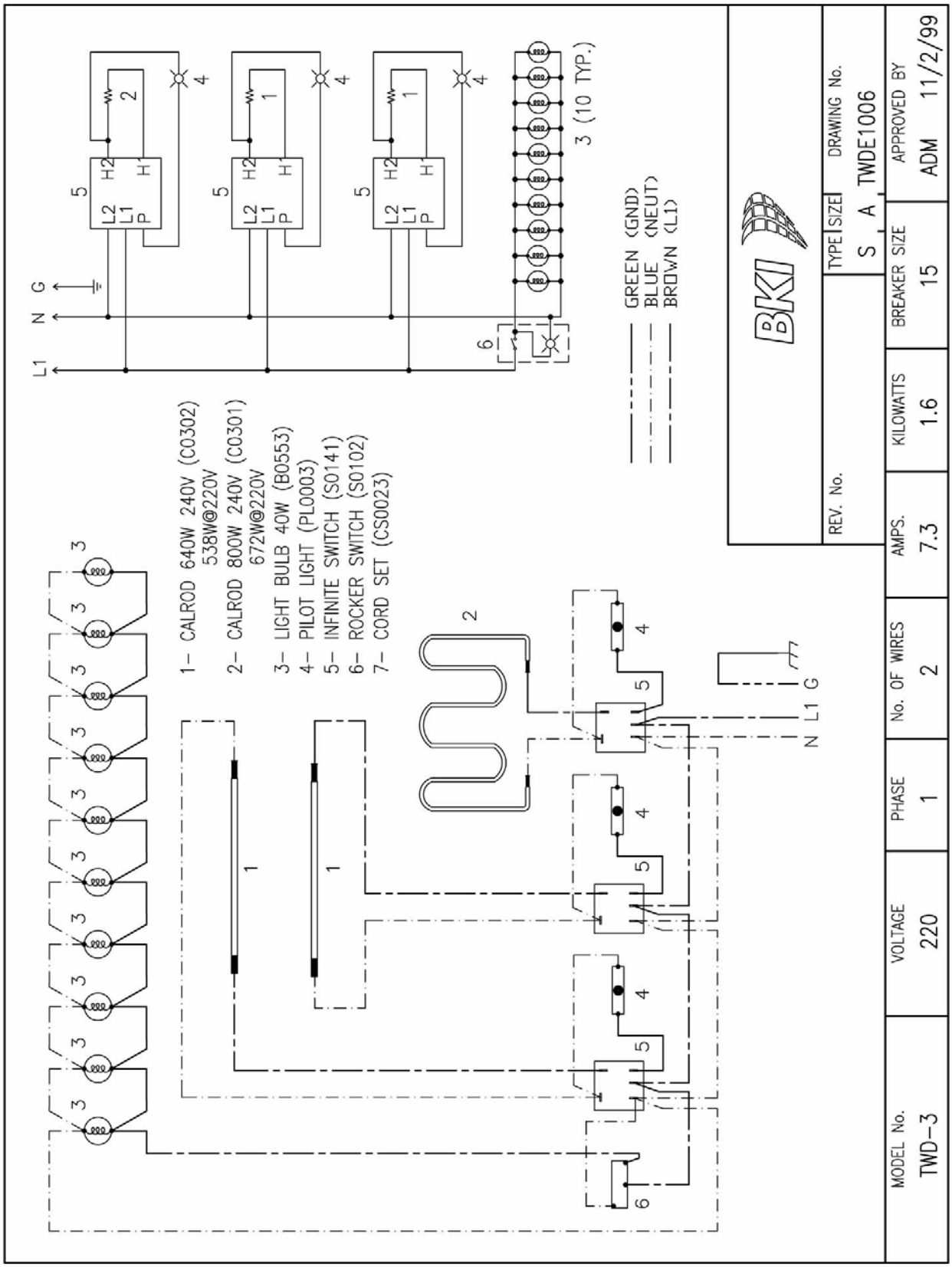

Notes

P.O. Box 80400, Simpsonville, S.C. 29680-0400, USA
http://www.bkideas.com

Made and printed in the U.S.A
LI0260/0407